Licensed to Unitek Safety Solution Joint Stock Company / cao linh (caolinhbk@gmail.com)
ISO Store Order: OP-772915 license #1/ Downloaded: 2024-04-14
Single user licence only, copying and networking prohibited.

INTERNATIONAL STANDARD

ISO 6183

Third edition
2022-03

Fire protection equipment — Carbon dioxide extinguishing systems for use on premises — Design and installation

Équipement de protection contre l'incendie — Installations fixes d'extinction par dioxyde de carbone utilisées dans les bâtiments — Conception et installation

Please share your feedback about the standard. Scan the QR code with your phone or click the link
Customer Feedback Form

Reference number
ISO 6183:2022(E)

© ISO 2022

Licensed to Unitek Safety Solution Joint Stock Company / cao linh (caolinhbk@gmail.com)
ISO Store Order: OP-772915 license #1/ Downloaded: 2024-04-14
Single user licence only, copying and networking prohibited.

COPYRIGHT PROTECTED DOCUMENT

© ISO 2022

All rights reserved. Unless otherwise specified, or required in the context of its implementation, no part of this publication may be reproduced or utilized otherwise in any form or by any means, electronic or mechanical, including photocopying, or posting on the internet or an intranet, without prior written permission. Permission can be requested from either ISO at the address below or ISO's member body in the country of the requester.

ISO copyright office
CP 401 • Ch. de Blandonnet 8
CH-1214 Vernier, Geneva
Phone: +41 22 749 01 11
Email: copyright@iso.org
Website: www.iso.org

Published in Switzerland

© ISO 2022 – All rights reserved

Licensed to Unitek Safety Solution Joint Stock Company / cao linh (caolinhbk@gmail.com)
ISO Store Order: OP-772915 license #1/ Downloaded: 2024-04-14
Single user licence only, copying and networking prohibited.

Contents

Page

Foreword ... **v**
Introduction ... **vi**
1 Scope ... **1**
2 Normative references ... **1**
3 Terms and definitions ... **1**
4 Use and limitations ... **4**
4.1 General ... 4
4.2 Uses for carbon dioxide systems ... 4
4.3 Limitations for carbon dioxide systems ... 5
4.4 Temperature limitations ... 5
5 Safety ... **5**
5.1 Hazard to personnel ... 5
5.2 Safety precautions ... 6
5.2.1 Normally occupied and normally unoccupied areas ... 6
5.2.2 Warning notices for occupiable areas ... 6
5.2.3 Warning notices for unoccupiable areas ... 9
5.3 Electrical hazards ... 10
5.4 Electrical earthing ... 11
5.5 Electrostatic discharge ... 11
6 System design ... **11**
6.1 General ... 11
6.1.1 Introduction ... 11
6.1.2 Specifications ... 11
6.1.3 Working documents ... 12
6.2 Carbon dioxide supply ... 12
6.2.1 Quality ... 12
6.2.2 Quantity ... 12
6.2.3 Container arrangement ... 13
6.2.4 Storage containers ... 14
6.3 Distribution ... 16
6.3.1 General ... 16
6.3.2 Piping ... 17
6.3.3 Fittings ... 17
6.3.4 Pipe and valve support ... 17
6.3.5 Valves ... 18
6.3.6 Nozzles ... 18
6.4 Enclosures (total flooding) ... 19
6.4.1 Structural strength ... 19
6.4.2 Loss through openings ... 20
6.4.3 Ventilation systems ... 20
6.5 Detection, actuation and control systems ... 20
6.5.1 General ... 20
6.5.2 Shut-down of plant and equipment ... 20
6.5.3 Automatic detection ... 21
6.5.4 Operating devices ... 21
6.5.5 Control equipment ... 22
6.5.6 Audible alarms and visual indicators ... 23
6.6 Local control (LC) and local control stations (LCS) ... 24
7 Carbon dioxide flow and concentration calculations ... **24**
7.1 General ... 24
7.2 System flow calculations ... 25
7.2.1 General ... 25

© ISO 2022 – All rights reserved

Licensed to Unitek Safety Solution Joint Stock Company / cao linh (caolinhbk@gmail.com)
ISO Store Order: OP-772915 license #1/ Downloaded: 2024-04-14
Single user licence only, copying and networking prohibited.

7.2.2 Friction losses ... 25
7.2.3 Pressure drop ... 25
7.2.4 Valves and fittings ... 26
7.2.5 As-installed calculations ... 26
7.2.6 Specific requirements ... 26
7.3 Carbon dioxide concentration requirements ... 26
7.3.1 Flame extinguishment ... 26
7.3.2 Inerting ... 27
7.4 Total flooding quantity ... 27
7.4.1 General ... 27
7.4.2 Design quantity ... 27
7.4.3 K_B factor ... 28
7.5 Design of local application systems ... 31
7.5.1 General ... 31
7.5.2 Carbon dioxide requirements ... 31
7.5.3 Rate by area method ... 31
7.5.4 Rate by volume method ... 33
7.6 Duration of protection — total flooding systems ... 34
7.7 System performance ... 35
7.7.1 Discharge time ... 35
7.7.2 Extended discharge ... 35

8 Commissioning and acceptance ... 35
8.1 General ... 35
8.2 Tests ... 35
8.2.1 General ... 35
8.2.2 Enclosure check ... 36
8.2.3 Review of mechanical components ... 36
8.2.4 Review of enclosure integrity ... 37
8.2.5 Review of electrical components ... 37
8.2.6 Preliminary functional tests ... 38
8.2.7 System functional operational test ... 39
8.2.8 Remote monitoring operations (if applicable) ... 39
8.2.9 Control panel primary power source ... 39
8.2.10 Completion of functional tests ... 39
8.3 Completion certificate and documentation ... 39

9 Inspection, maintenance, testing and training ... 40
9.1 General ... 40
9.2 Inspection ... 40
9.2.1 General ... 40
9.2.2 Container ... 40
9.2.3 Hose ... 40
9.2.4 Enclosures ... 40
9.3 Maintenance ... 41
9.3.1 General ... 41
9.3.2 User's programme of inspection ... 41
9.3.3 Service schedule ... 41
9.4 Training ... 41

Annex A (normative) **Working documents ... 42**

Annex B (normative) **Carbon dioxide system pipe and orifice size determination ... 49**

Annex C (informative) **System performance verification ... 57**

Annex D (informative) **General information on carbon dioxide ... 58**

Annex E (informative) **Examples of calculations ... 63**

Bibliography ... 68

© ISO 2022 – All rights reserved

Licensed to Unitek Safety Solution Joint Stock Company / cao linh (caolinhbk@gmail.com)
ISO Store Order: OP-772915 license #1/ Downloaded: 2024-04-14
Single user licence only, copying and networking prohibited.

Foreword

ISO (the International Organization for Standardization) is a worldwide federation of national standards bodies (ISO member bodies). The work of preparing International Standards is normally carried out through ISO technical committees. Each member body interested in a subject for which a technical committee has been established has the right to be represented on that committee. International organizations, governmental and non-governmental, in liaison with ISO, also take part in the work. ISO collaborates closely with the International Electrotechnical Commission (IEC) on all matters of electrotechnical standardization.

The procedures used to develop this document and those intended for its further maintenance are described in the ISO/IEC Directives, Part 1. In particular, the different approval criteria needed for the different types of ISO documents should be noted. This document was drafted in accordance with the editorial rules of the ISO/IEC Directives, Part 2 (see www.iso.org/directives).

Attention is drawn to the possibility that some of the elements of this document may be the subject of patent rights. ISO shall not be held responsible for identifying any or all such patent rights. Details of any patent rights identified during the development of the document will be in the Introduction and/or on the ISO list of patent declarations received (see www.iso.org/patents).

Any trade name used in this document is information given for the convenience of users and does not constitute an endorsement.

For an explanation of the voluntary nature of standards, the meaning of ISO specific terms and expressions related to conformity assessment, as well as information about ISO's adherence to the World Trade Organization (WTO) principles in the Technical Barriers to Trade (TBT), see www.iso.org/iso/foreword.html.

This document was prepared by Technical Committee ISO/TC 21, *Equipment for fire protection and firefighting*, Subcommittee SC 8, *Gaseous media and firefighting systems using gas*.

This third edition cancels and replaces the second edition (ISO 6183:2009), which has been technically revised. It also incorporates the Amendment(s) ISO 6183:2009/Amd. 1:2017 and ISO 6183:2009/Amd. 2:2019.

The main changes are as follows:

— guidance on container storage has been updated;

— alerts when removing actuators have been added;

— a commissioning check list has been included in Annex A;

— pictorial examples have been added to Annex C.

Any feedback or questions on this document should be directed to the user's national standards body. A complete listing of these bodies can be found at www.iso.org/members.html.

© ISO 2022 – All rights reserved

Licensed to Unitek Safety Solution Joint Stock Company / cao linh (caolinhbk@gmail.com)
ISO Store Order: OP-772915 license #1/ Downloaded: 2024-04-14
Single user licence only, copying and networking prohibited.

Introduction

This document is intended for use by those concerned with purchasing, designing, installing, testing, inspecting, approving, operating and maintaining carbon dioxide (CO_2) extinguishing systems.

This document applies only to carbon dioxide fixed fire-extinguishing systems in buildings and other premises on land. Although the general principles can apply to other uses (e.g. maritime use), for these other uses, it is likely that additional considerations will have to be taken into account and the application of the requirements given in this document is therefore unlikely to be fully satisfactory. General information about carbon dioxide as an extinguishing medium is given in Annex D. This can be useful background information for those unfamiliar with the characteristics of this medium.

It has been assumed in the preparation of this document that the execution of its provisions will be entrusted to those persons appropriately qualified and experienced in the specification, design, installation, testing, approval, inspection, operation and maintenance of systems and equipment, for whose guidance it has been prepared, and who can be expected to exercise a duty of care to avoid the unnecessary release of carbon dioxide. New requirements to minimize the need to release carbon dioxide during testing and commissioning procedures are included in this third edition. These are linked to the inclusion of enclosure integrity testing.

Carbon dioxide has for many years been a recognized effective medium for the extinction of flammable liquid fires as well as fires in the presence of electrical and ordinary Class A hazards. Nevertheless, in the planning of comprehensive schemes, it should be remembered that there can be hazards for which this media is not suitable, and that in certain circumstances or situations there can be dangers in its use requiring special precautions.

The use of carbon dioxide is no longer recommended for total flooding of occupied areas if more appropriate extinguishing agents are available. ISO 14520 provides requirements for other extinguishing agents that can be more appropriately used in these areas.

It is important that the fire protection of a building or plant be considered as a whole. Carbon dioxide systems form only a part, albeit an important part, of the available facilities. It cannot be assumed that their adoption necessarily removes the need to consider supplementary measures, such as the provision of portable fire extinguishers or other mobile appliances for first aid or emergency use, or to deal with special hazards.

Advice on these matters can be obtained from the appropriate manufacturer of the carbon dioxide or the extinguishing system. Information can also be sought from the appropriate fire authority, the health and safety authorities, and insurers. In addition, reference needs to be made, as appropriate, to the other national standards and statutory regulations of a given country.

It is essential that firefighting equipment be carefully maintained to ensure instant readiness when required. Routine maintenance is liable to be overlooked or given insufficient attention by the owner of the system. It is, however, neglected at the peril of the lives of occupants of the premises and at the risk of crippling financial loss. The importance of maintenance cannot be too highly emphasized. Inspection, preferably by a third party, should include an evaluation concluding that the extinguishing system continues to provide adequate protection for the risk (protected zones as well as state-of-the-art can change over time).

© ISO 2022 – All rights reserved

Licensed to Unitek Safety Solution Joint Stock Company / cao linh (caolinhbk@gmail.com)
ISO Store Order: OP-772915 license #1/ Downloaded: 2024-04-14
Single user licence only, copying and networking prohibited.

Fire protection equipment — Carbon dioxide extinguishing systems for use on premises — Design and installation

1 Scope

This document specifies requirements and gives recommendations for the design, installation, testing, maintenance and safety of fixed carbon dioxide firefighting systems in buildings, plants or other structures. It is not applicable to extinguishing systems on ships, in aircraft, on vehicles or on mobile fire appliances, or to below-ground systems in the mining industry; nor does it apply to carbon dioxide pre-inerting systems.

Design of systems where unclosable opening(s) exceed a specified area and where the opening(s) can be subject to the effect of wind is not specified, although general guidance on the procedure to be followed in such cases is given (see 7.4.3.2).

2 Normative references

The following documents are referred to in the text in such a way that some or all of their content constitutes requirements of this document. For dated references, only the edition cited applies. For undated references, the latest edition of the referenced document (including any amendments) applies.

ISO 7240-2, *Fire detection and alarm systems — Part 2: Fire detection control and indicating equipment*

ISO 7240-23, *Fire detection and alarm systems — Part 23: Visual alarm devices*

ISO 7731, *Ergonomics — Danger signals for public and work areas — Auditory danger signals*

ISO 8201, *Alarm systems — Audible emergency evacuation signal — Requirements*

ISO 14520-1:—[1], *Gaseous fire-extinguishing systems — Physical properties and system design — Part 1: General requirements*

ISO 16003, *Components for fire-extinguishing systems using gas — Requirements and test methods — Container valve assemblies and their actuators; selector valves and their actuators; nozzles; flexible and rigid connectors; and check valves and non-return valves*

3 Terms and definitions

For the purposes of this document, the following terms and definitions apply.

ISO and IEC maintain terminology databases for use in standardization at the following addresses:

— ISO Online browsing platform: available at https://www.iso.org/obp

— IEC Electropedia: available at https://www.electropedia.org/

3.1
approved
acceptable to a relevant *authority* (3.2)

Note 1 to entry: In determining the acceptability of installations or procedures, equipment or materials, the authority can base acceptance on compliance with the appropriate standards.

1) Under preparation. Stage at the time of publication: ISO/DIS 14520-1:2022.

© ISO 2022 – All rights reserved

Licensed to Unitek Safety Solution Joint Stock Company / cao linh (caolinhbk@gmail.com)
ISO Store Order: OP-772915 license #1/ Downloaded: 2024-04-14
Single user licence only, copying and networking prohibited.

3.2
authority
organization, office or individual responsible for approving equipment, installations or procedures

3.3
automatic/manual switch
means of converting the system from automatic to manual actuation

Note 1 to entry: This can be in the form of a manual switch on the control panel or other units, or a personnel door interlock. In all cases, this changes the actuation mode of the system from automatic and manual to manual only or vice versa.

3.4
clearance
air gap between equipment, including piping and nozzles and unenclosed or uninsulated live electrical components at other than ground potential

3.5
deep-seated fire
fire involving solids subject to smouldering

Note 1 to entry: Examples of a deep-seated fire include baled, stacked or piled materials such as paper, wool and grain.

3.6
design concentration
concentration of carbon dioxide, including a *safety factor* (3.24), required for system design purposes

3.7
engineered system
system in which the supply of carbon dioxide is discharged through a system of pipes and nozzles in which the size of each section of pipe and nozzle orifice has been calculated in accordance with the requirements of this document

3.8
extinguishing concentration
minimum concentration of carbon dioxide required to extinguish a fire involving a particular fuel under defined experimental conditions excluding any *safety factor* (3.24)

3.9
fill density
mass of carbon dioxide per unit *volume* (3.11) of container

3.10
design quantity
mass of carbon dioxide required to achieve the *design concentration* (3.6) within the protected *volume* (3.11)

3.11
volume
protected space enclosed by the building elements

3.12
high-pressure storage
storage of carbon dioxide in pressurized containers at ambient temperatures

3.13
hold time
period of time during which a concentration of carbon dioxide greater than the fire *extinguishing concentration* (3.8) is maintained

Note 1 to entry: See 7.6.2.

© ISO 2022 – All rights reserved

Licensed to Unitek Safety Solution Joint Stock Company / cao linh (caolinhbk@gmail.com)
ISO Store Order: OP-772915 license #1/ Downloaded: 2024-04-14
Single user licence only, copying and networking prohibited.

3.14
inspection
visual check to give reasonable assurance that the extinguishing system is fully charged and operable

Note 1 to entry: This is done by seeing that the system is in place, that it has not been activated or tampered with, and that there is no obvious physical damage or condition to prevent operation.

3.15
liquid discharge time
time during which predominantly liquid carbon dioxide is present at the nozzle

3.16
lock-off device
manually operated shut-off valve installed in the discharge piping downstream of the carbon dioxide containers, or other type of device that mechanically prevents agent container actuation

Note 1 to entry: The actuation of this device provides an indication of system isolation.

Note 2 to entry: The intent is to prevent the discharge of carbon dioxide into the hazard area when the lock-off device is activated.

3.17
local application system
automatic or manual fire extinguishing system in which a fixed supply of carbon dioxide is permanently connected to fixed piping with nozzles arranged to discharge the carbon dioxide directly to a fire occurring in a defined area that has no enclosure surrounding it, or is only partially enclosed, and that does not produce an *extinguishing concentration* (3.8) throughout the entire *volume* (3.11) containing the protected hazard

3.18
low-pressure storage
storage of carbon dioxide in pressurized containers at a controlled low temperature, normally −18 °C to −20 °C

Note 1 to entry: The pressure in this type of storage is approximately 21 bar[2)].

3.19
maintenance
thorough check to verify that the extinguishing system will operate as intended

Note 1 to entry: It includes a thorough examination and any necessary repair or replacement of system components.

3.20
maximum working pressure
equilibrium pressure within a container at the maximum working temperature

Note 1 to entry: For *high-pressure storage* (3.12), at the maximum *fill density* (3.9). For a container in transit, the equilibrium pressure can differ from that in storage within a building.

Note 2 to entry: For *low-pressure storage* (3.18), the pressure corresponding to the maximum controlled temperature of −18 °C.

3.21 Terms related to occupied and unoccupiable areas

3.21.1
normally occupied area
area intended for occupancy

2) 1 bar = 0,1 MPa = 10^5 Pa; 1 MPa = 1 N/mm^2.

© ISO 2022 – All rights reserved

Licensed to Unitek Safety Solution Joint Stock Company / cao linh (caolinhbk@gmail.com)
ISO Store Order: OP-772915 license #1/ Downloaded: 2024-04-14
Single user licence only, copying and networking prohibited.

3.21.2
normally unoccupied area
area not normally occupied by people, but which may be entered occasionally for brief periods

3.21.3
unoccupiable area
area which cannot be occupied by people due to dimensional or other physical constraints

EXAMPLE Shallow voids and cabinets.

3.22
pre-engineered system
system consisting of a supply of extinguishant of specified capacity coupled to pre-calculated pipework and nozzle arrangement up to maximum permitted limits

Note 1 to entry: No deviation is permitted from the limits specified by the manufacturer or *authority* (3.2).

3.23
pre-liquid vapour flow time
time from the opening of the container or *selector valve* (3.25) to the start of predominantly liquid flow at the most unfavourable nozzle

3.24
safety factor
multiplier of the carbon dioxide *extinguishing concentration* (3.8), used to determine minimum *design concentration* (3.6)

3.25
selector valve
valve installed in the discharge piping downstream of the storage containers, used to direct the carbon dioxide to the appropriate hazard

Note 1 to entry: It is used where one or more storage containers are arranged to selectively discharge carbon dioxide to any of several separate hazards.

3.26
surface fire
fire involving combustible or flammable liquids, gases and solids not subject to smouldering

3.27
total flooding system
system arranged to discharge carbon dioxide into an enclosed space to achieve the appropriate *design concentration* (3.6)

4 Use and limitations

4.1 General

The design, installation, service and maintenance of carbon dioxide fire-extinguishing systems shall be performed by those competent in fire extinguishing system technology. Maintenance and installation shall only be performed by qualified personnel and companies.

4.2 Uses for carbon dioxide systems

Carbon dioxide, local application, total flooding and manual hose reel fire-extinguishing systems are useful within the limits of this document in extinguishing fires involving specific hazards or equipment.

NOTE Some national regulations do not allow manual hose reel systems.

© ISO 2022 – All rights reserved

Licensed to Unitek Safety Solution Joint Stock Company / cao linh (caolinhbk@gmail.com)
ISO Store Order: OP-772915 license #1/ Downloaded: 2024-04-14
Single user licence only, copying and networking prohibited.

The following are typical of such hazards, but the list is not exhaustive:

a) combustible or flammable liquid and gases;

b) electrical hazards such as transformers, switches, circuit breakers, rotating equipment and electronic equipment;

c) engines utilizing gasoline and other flammable liquid fuels;

d) ordinary combustibles such as paper, wood, and textiles.

4.3 Limitations for carbon dioxide systems

Carbon dioxide cannot extinguish fires involving certain types of materials such as:

a) chemicals containing their own supply of oxygen, such as cellulose nitrate; or

b) metals and chemicals which react with carbon dioxide, e.g. alkali metals and metal hydrides.

While carbon dioxide does not extinguish certain fuels containing their own oxygen of combustion, it does not react dangerously with these materials or increase their burning rate. Carbon dioxide, if used in this situation in a total flooding system, provides protection for adjacent combustibles or can be successfully used if the reactive metals or hydride are first covered by another material. Examples of the latter condition are sodium stored or used under kerosene, cellulose nitrate in a solution of lacquer thinner, and magnesium chips covered with heavy oil.

4.4 Temperature limitations

All devices shall be designed for the service they will encounter and shall not be readily rendered inoperative or susceptible to accidental operation. Devices shall normally be designed to function properly from −20 °C to +50 °C, or marked to indicate temperature limitations, or in accordance with the manufacturer's specifications, which shall be marked on the name-plate, or (where there is no name-plate) in the manufacturer's instruction manual.

5 Safety

5.1 Hazard to personnel

The discharge of carbon dioxide in fire-extinguishing concentration creates serious hazards to personnel, such as suffocation and reduced visibility during and after the discharge period. Hazards to personnel created by the discharge of carbon dioxide shall be considered in the design of the system.

Carbon dioxide gas is heavier than air and will collect in pits, wells, shaft bottoms or other low-lying areas, and can migrate into adjacent places outside the protected space. Consideration shall also be given to places to which the carbon dioxide can migrate or collect in the event of a discharge from a safety relief device of a storage container.

Conformance with this document does not affect the user's statutory responsibility to conform to the appropriate safety regulations.

NOTE The safety precautions required by this document do not address toxicological or physiological effects associated with the products of combustion caused by fire.

© ISO 2022 – All rights reserved

Licensed to Unitek Safety Solution Joint Stock Company / cao linh (caolinhbk@gmail.com)
ISO Store Order: OP-772915 license #1/ Downloaded: 2024-04-14
Single user licence only, copying and networking prohibited.

5.2 Safety precautions

5.2.1 Normally occupied and normally unoccupied areas

The use of carbon dioxide is not recommended for total flooding of normally occupied and normally unoccupied areas as long as comparable alternative firefighting methods are available. However, where carbon dioxide systems are used to protect these areas, they shall be provided with the following:

a) A non-electrical time delay device and an electrical and pneumatic pre-discharge alarm that is distinct from all other alarm signals or other approved combination of devices providing equivalent level of safety and reliability.

   The pre-discharge alarm shall be audible in all areas within the protected space and, where used, carbon dioxide powered alarms shall not result in the development of an unsafe atmosphere.

   NOTE 1 National regulations can require the use of product standards, for example the EN 12094 series in Europe.

b) An automatic/manual switch, with associated status indication.

c) A lock-off device supervised to indicate a system fault if the valve is more than one eighth closed.

   NOTE 2 The purpose of the lock-off device is to physically prevent discharge of carbon dioxide into the protected space, for example, during maintenance or if safe evacuation is not possible during the pre-warning time.

   NOTE 3 National regulations can require the use of product standards, for example the EN 12094 series, in Europe.

d) Emergency lighting and adequate direction signs for exit routes: continuous visual and audible alarms at entrances and designated exits inside the protected area and continuous visual alarms outside the protected area that operate until the protected area has been declared safe.

e) Designated exit doors that are outward swinging, self-closing and able to be opened from the inside, even when locked from the outside.

f) Appropriate warning and instruction signs (see 5.2.2).

g) Means for prompt natural or forced-draft ventilation of such areas after any discharge of carbon dioxide. Forced-draft ventilation will often be necessary. Care shall be taken to completely dissipate hazardous atmospheres, and not just move them to other locations, as carbon dioxide is heavier than air.

Where it is possible for carbon dioxide gas to collect in pits, wells, shaft bottoms or other low-lying areas, consideration shall be given to adding an odoriferous substance to the carbon dioxide.

Instructions to, and drills of, all personnel within or in the vicinity of protected areas, including maintenance or construction personnel who could be brought into the area, shall be given to ensure their correct actions when the system operates. Following discharge of the system, personnel should not enter the enclosure until it has been declared as being safe to do so. Additional safety aspects such as breathing apparatus should be considered.

The need to comply with national regulations or standards requiring other precautions shall be considered.

5.2.2 Warning notices for occupiable areas

Notices shall be provided at the following locations:

a) at all entrances to the protected enclosure (see Figures 1 and 2);

b) at each emergency manual release point (see Figure 3);

 © ISO 2022 – All rights reserved

Licensed to Unitek Safety Solution Joint Stock Company / cao linh (caolinhbk@gmail.com)
ISO Store Order: OP-772915 license #1/ Downloaded: 2024-04-14
Single user licence only, copying and networking prohibited.

c) at each lock-off valve (see Figure 4).

For carbon dioxide systems protecting occupiable areas, appropriate warning and instruction signs shall be provided adjacent to access points to the protected space or as specified by national requirements. Examples of a typical notices are shown in Figures 1 – 5.

THIS AREA IS FITTED WITH A

CARBON DIOXIDE FIRE EXTINGUISHING SYSTEM

EVACUATE AREA ON SOUNDING OF ALARM

DO NOT ENTER

AFTER EXTINGUISHING AGENT DISCHARGE UNTIL THE AREA HAS BEEN THOROUGLY VENTILATED

Figure 1 — Typical instruction notice to be displayed at each entry to the protected area or enclosure

© ISO 2022 – All rights reserved

Licensed to Unitek Safety Solution Joint Stock Company / cao linh (caolinhbk@gmail.com)
ISO Store Order: OP-772915 license #1/ Downloaded: 2024-04-14
Single user licence only, copying and networking prohibited.

WARNING

**LOCK OFF
CARBON DIOXIDE FIRE
EXTINGUISHING SYSTEM
BEFORE ENTERING**

[Identify protected area]

Figure 2 — Typical lock-off warning system notice

CARBON DIOXIDE FIRE EXTINGUISHING SYSTEM

MANUAL RELEASE FOR

[identify protected area]

WARNING

ENSURE AREA IS EVACUATED BEFORE OPERATING

Figure 3 — Typical instruction notice to be displayed at the manual release

© ISO 2022 – All rights reserved

Licensed to Unitek Safety Solution Joint Stock Company / cao linh (caolinhbk@gmail.com)
ISO Store Order: OP-772915 license #1/ Downloaded: 2024-04-14
Single user licence only, copying and networking prohibited.

CARBON DIOXIDE FIRE EXTINGUISHING SYSTEM LOCK-OFF VALVE FOR

[identify protected area]

WARNING

ENSURE AREA IS CLEAR OF PERSONNEL BEFORE OPENING VALVE

[identify protected area]

Figure 4 — Typical lock-off valve notice

5.2.3 Warning notices for unoccupiable areas

For carbon dioxide systems protecting unoccupiable areas, appropriate warning and instruction signs shall be provided adjacent to access points to the protected space or as specified by national requirements. An example of a typical notice is shown in Figure 5.

Additional notices may be provided at each emergency manual release point (see Figure 3).

© ISO 2022 – All rights reserved

Licensed to Unitek Safety Solution Joint Stock Company / cao linh (caolinhbk@gmail.com)
ISO Store Order: OP-772915 license #1/ Downloaded: 2024-04-14
Single user licence only, copying and networking prohibited.

WARNING

(identify protected area)

IS FITTED WITH A CARBON DIOXIDE FIRE EXTINGUISHING SYSTEM

ENSURE AREA IS THOROUGHLY VENTILATED AFTER SYSTEM DISCHARGE

Figure 5 — Typical warning notice to be displayed at access point to the protected unoccupiable area

5.3 Electrical hazards

Where exposed electrical conductors are present, clearances no smaller than those given in Table 1 shall be provided, where practicable, between the electrical conductors and all parts of the system able to be approached during maintenance. Where these clearance distances cannot be achieved, warning notices shall be provided, and a safe system of maintenance work shall be adopted.

The system should be arranged so that all normal operations can be carried out safely by the operator.

© ISO 2022 – All rights reserved

Licensed to Unitek Safety Solution Joint Stock Company / cao linh (caolinhbk@gmail.com)
ISO Store Order: OP-772915 license #1/ Downloaded: 2024-04-14
Single user licence only, copying and networking prohibited.

Table 1 — Safety clearances to enable operation, inspection, cleaning, repairs, painting and normal maintenance work to be carried out

Maximum rated voltage	Minimum clearance from any point on or about the permanent equipment where a person may be required to stand[a]	
	To the nearest unscreened live conductor in air (section clearance)	To the nearest part not at earth potential of an insulator[b] supporting a live conductor (ground clearance)
kV	m	m
15	2,6	2,5
33	2,75	
44	2,90	
66	3,10	
88	3,20	
110	3,35	
132	3,50	
165	3,80	
220	4,30	
275	4,60	

[a] Measured from position of the feet.

[b] The term *insulator* includes all forms of insulating supports, such as pedestal and suspension insulators, bushings, cable sealing ends and the insulating supports of certain types of circuit breaker.

5.4 Electrical earthing

Systems within electrical substations or switch rooms shall be efficiently bonded and earthed to prevent the metalwork becoming electrically charged or as specified by national requirements.

5.5 Electrostatic discharge

CAUTION — Care shall be taken when discharging carbon dioxide into potentially explosive atmospheres. Electrostatic charging of conductors not bonded to earth can occur during the discharge of carbon dioxide. These conductors can discharge to other objects with sufficient energy to initiate an explosion.

The system shall be adequately bonded and earthed to minimize the risk of electrostatic discharge or as specified by national requirements.

6 System design

6.1 General

6.1.1 Introduction

This clause sets out the requirements for the design of the extinguishing system.

The need for ancillary systems and components to comply with national regulations or standards shall be considered.

6.1.2 Specifications

Specifications for carbon dioxide fire-extinguishing systems shall be prepared under the supervision of a person fully experienced in the design of such systems and, where appropriate, with the advice of

© ISO 2022 – All rights reserved

Licensed to Unitek Safety Solution Joint Stock Company / cao linh (caolinhbk@gmail.com)
ISO Store Order: OP-772915 license #1/ Downloaded: 2024-04-14
Single user licence only, copying and networking prohibited.

the authority. The specifications shall include all pertinent items necessary for the proper design of the system, such as:

a) the designation of the authority;

b) variances from the standard to be permitted by the authority;

c) design criteria;

d) system sequence of operations;

e) the type and extent of the acceptance testing to be performed after installation of the system; and

f) owner training requirements.

6.1.3 Working documents

Layout and system proposal documents shall be submitted for approval to the authority before installation or modification begins. The type of documentation required shall be as specified in Annex A.

6.2 Carbon dioxide supply

6.2.1 Quality

The carbon dioxide shall comply with the requirements of Table 2.

Table 2 — Requirements for carbon dioxide properties

Property	Requirements
Purity, % (volume fraction) min.	99,5
Water content, % (mass fraction) max.	0,015
Oil content, ppm by mass, max.	5
Total sulfur compounds content, expressed as sulfur, ppm by mass, max.	5,0
NOTE 1 Carbon dioxide obtained by converting dry ice to liquid will not usually conform with these requirements unless it has been properly processed to remove excess water and oil. NOTE 2 ppm = parts per million.	

6.2.2 Quantity

6.2.2.1 The amount of carbon dioxide in the system shall be at least sufficient for the largest single hazard or group of hazards that are to be protected against simultaneously.

6.2.2.2 If several extinguishing zones are served by one carbon dioxide battery or one container system, a selector valve shall be provided for each extinguishing zone. Selector valves for container systems shall open automatically before or at the same time as the operation of the container valves.

NOTE National regulations can require the use of product standards, for example the EN 12094 series in Europe.

6.2.2.3 The determined carbon dioxide quantity required shall be stored so as to be available at all times and shall not be used for other purposes, including manual hose reels.

Where there is a loss of more than 10 % of the carbon dioxide in any container the container shall be replaced or recharged.

© ISO 2022 – All rights reserved

Licensed to Unitek Safety Solution Joint Stock Company / cao linh (caolinhbk@gmail.com)
ISO Store Order: OP-772915 license #1/ Downloaded: 2024-04-14
Single user licence only, copying and networking prohibited.

6.2.2.4 Additional quantities of carbon dioxide shall be stored in accordance with the following.

a) **Low-pressure systems**

1) In order to equalize charge or drain tolerances and gas residues, the quantities of carbon dioxide to be stored for low-pressure systems as determined for the largest extinguishing zone shall be increased by at least 10 %.

2) If there is a possibility that liquid carbon dioxide might remain in the piping between storage container and nozzle pipe system, the carbon dioxide store shall be increased by this remaining quantity, in addition to the 10 % increase specified in item 1) above.

b) **High-pressure systems**

In the case of local application systems, the design quantity of carbon dioxide shall be increased by 40 % to determine nominal container storage capacity, since only the liquid portion of the discharge is effective.

6.2.2.5 In low-pressure systems, selector valves shall open automatically and close automatically after discharge of the required quantity of carbon dioxide. Valves shall be equipped so that they can be opened manually

6.2.2.6 The reserve quantity shall be as many multiples of the main supply as required.

6.2.2.7 The time needed to obtain carbon dioxide for replenishment to restore systems to the operating conditions shall be considered as a major factor in determining the reserve supply needed.

6.2.2.8 Where uninterrupted protection is required, both the main and reserve supply shall be permanently connected to the distribution piping and arranged for easy changeover.

6.2.3 Container arrangement

6.2.3.1 General requirements

a) Arrangements shall be made for container and valve assemblies and accessories to be accessible for inspection, testing and other maintenance when required.

NOTE 1 National regulations can require the use of product standards, for example the EN 12094 series in Europe.

b) Containers shall be adequately mounted and suitably supported according to the systems installation manual so as to provide for convenient individual servicing of the container and its contents.

c) Containers shall be located as near as is practical to the enclosure they protect, preferably outside the enclosure. Containers can be located within the enclosure only if sited so as to minimize the risk of exposure to fire and explosion.

d) Storage containers shall not be located where they will be subjected to severe weather conditions or to potential damage due to mechanical, chemical, or other causes. Where potentially damaging exposure or unauthorized interference are likely, suitable enclosures or guards shall be provided.

NOTE 2 Direct or indirect sunlight has the potential to increase the container temperature above that of the surrounding atmospheric temperature.

6.2.3.2 Conditions for the storage of pressurized containers

a) The temperature range shall not exceed the manufacturer's stated storage temperature range. If not known, the storage temperate range shall be in the range of 0 °C to 50 °C.

© ISO 2022 – All rights reserved

Licensed to Unitek Safety Solution Joint Stock Company / cao linh (caolinhbk@gmail.com)
ISO Store Order: OP-772915 license #1/ Downloaded: 2024-04-14
Single user licence only, copying and networking prohibited.

b) Containers shall not be placed in direct sunlight. If an outdoor sunshade is used, it shall be verified that it provides shade to the entire surface of the container at all times of the day and year.

c) Storage containers shall not be located where they will be subjected to severe weather conditions or to potential damage due to mechanical, chemical or other causes. Where potentially damaging exposure or unauthorized interference are likely, suitable enclosures or guards shall be provided. Storage containers shall be sheltered from direct exposure to the weather.

NOTE Direct sunlight has the potential to increase the container temperature above that of the surrounding atmospheric temperature.

6.2.3.3 Arrangement for high-pressure containers

When two or more containers are connected into the same manifold, automatic means (such as check valves) shall be provided to prevent loss of carbon dioxide from the manifold, if the system is operated, when any containers are removed for maintenance.

NOTE National regulations can require the use of product standards, for example the EN 12094 series in Europe.

Containers connected to a common manifold in a system shall be:

a) of the same nominal form and capacity;

b) filled with the same nominal mass of carbon dioxide; and

c) interchangeable.

6.2.4 Storage containers

6.2.4.1 General

Containers shall be designed to hold carbon dioxide. The need for containers used in these systems to be designed and marked to meet the requirements of relevant national standards shall be considered.

6.2.4.2 Marking

Each carbon dioxide container shall have a permanent nameplate or other permanent marking specifying the carbon dioxide, tare and gross mass.

Containers without a dip tube shall be appropriately marked.

6.2.4.3 High-pressure containers

The content of the containers shall be monitored continuously. Any loss of more than 10 % of the carbon dioxide in any container shall be automatically indicated.

NOTE National regulations can require the use of product standards, for example the EN 12094 series in Europe.

Fill density shall be appropriate for the maximum ambient temperatures listed in Table 3.

The need for the container and valve assembly to be fitted with a pressure relief device that conforms with national regulations or standards shall be considered.

© ISO 2022 – All rights reserved

Licensed to Unitek Safety Solution Joint Stock Company / cao linh (caolinhbk@gmail.com)
ISO Store Order: OP-772915 license #1/ Downloaded: 2024-04-14
Single user licence only, copying and networking prohibited.

Table 3 — Maximum storage temperature

Fill density kg/l	Maximum ambient temperature °C	Maximum working pressure for closed pipe sections bar
0,75	40	140
0,68	49	140
0,55	65	140

NOTE 1 If it is likely that the ambient storage temperature will be below 0 °C, then it can be necessary to take special measures (e.g. insulation, addition of a permanent gas) in order to conform with the discharge times given in Table 6.

NOTE 2 1 bar = 0,1 MPa = 10^5 Pa; 1 MPa = 1 N/mm^2.

6.2.4.4 Low-pressure containers

Low pressure containers requirements are as follows:

a) The container shall be designed to maintain carbon dioxide at a nominal temperature of –18 °C, corresponding to a pressure of 20,7 bar[3]. A monitored device shall be provided to indicate the carbon dioxide content in the vessel and to give a warning when it is necessary to recharge the vessel.

NOTE 1 For this purpose, the vessel can be placed on a weighing machine or be equipped with an automatic content indicator.

NOTE 2 National regulations can require the use of product standards, for example the EN 12094 series in Europe.

b) The container shall be fitted with a pressure gauge and a safety valve.

c) An automatic refrigerating system shall ensure that the temperature and pressure of carbon dioxide are kept within the required limits.

d) On low-pressure containers, an over-pressure alarm shall be provided which will sound prior to the operation of the safety valves.

e) The container shall have sufficient insulation to limit the loss of carbon dioxide to not more than 1,5 % (at 3 t to 6 t charge), not more than 0,8 % (over 6 t to 10 t charge) and not more than 0,5 % (over 10 t charge) in 24 h in the event of a failure of the refrigerating system at the highest expected ambient temperature.

f) Any loss of more than 10 % of the carbon dioxide in any container shall be automatically indicated.

g) Each low-pressure container shall be equipped with a high/low pressure supervisory alarm set to alarm at least 0,1 MPa (1 bar) below the vessel's design maximum allowable working pressure and not less than 1,724 MPa (17,24 bar).

h) Insulation materials shall be fitted with metal sheeting to avoid mechanical damage.

i) Care shall be taken during filling to ensure the correct mass of carbon dioxide is stored. The low-pressure container manufacturer’s filling procedures should be observed.

6.2.4.5 Operating temperatures

Unless otherwise approved, in-service container operating temperatures shall not exceed 50 °C; nor shall they be less than –20 °C. (see also 7.2.1.)

3) 1 bar = 0,1 MPa = 10^5 Pa; 1 MPa = 1 N/mm^2.

© ISO 2022 – All rights reserved

Licensed to Unitek Safety Solution Joint Stock Company / cao linh (caolinhbk@gmail.com)
ISO Store Order: OP-772915 license #1/ Downloaded: 2024-04-14
Single user licence only, copying and networking prohibited.

External heating or cooling should be used to keep the temperature of the storage container within the specified range unless the system is designed for proper operation with operating temperatures outside this range.

6.3 Distribution

6.3.1 General

6.3.1.1 Pipework and fittings shall be non-combustible and shall be able to withstand the expected pressures and temperatures without damage. The need for pipework and fittings to comply with national regulations or standards shall be considered.

NOTE The attention of the designer is drawn to the potential of moisture condensing in the system pipework, resulting in corrosion.

The materials of construction of all components shall be mutually compatible as well as being compatible with all fixings and the extinguishing agent used.

6.3.1.2 Before final assembly, pipework and fittings shall be visually inspected to ensure they are clean and free of burrs and rust, and that no foreign matter is inside, and the full bore is clear. After assembly, the system shall be thoroughly blown through with dry air or other compressed gas.

A dirt trap consisting of a tee with a capped nipple, at least 50 mm long, shall be installed at the end of each nozzle pipe run. Drain traps protected against interference by unauthorized personnel should be fitted at the lowest points in the pipework system if there is any possibility of a build-up of water.

6.3.1.3 In systems where valve arrangements introduce sections of closed piping, such sections shall be equipped with the following:

a) indication of carbon dioxide trapped in piping;

b) means for safe manual venting (see 6.3.1.5);

c) automatic relief of over pressures, where required.

6.3.1.4 Over-pressure relief devices shall be designed to operate at a pressure not greater than the maximum working pressure of the pipework.

6.3.1.5 Pressure relief devices shall be fitted so that the discharge, in the event of operation, will not injure or endanger personnel. The carbon dioxide shall be vented to atmosphere in a safe location.

6.3.1.6 In systems using pressure-operated container valves, automatic means shall be provided to vent any container leakage that could build up pressure in the pilot system and cause unwanted opening of the container valve. The means of pressure venting shall not prevent operation of the container valve.

6.3.1.7 The manifolds to the container and valve assembly shall be hydrostatically tested by the manufacturer to a minimum pressure of 1,5 times maximum working pressure for 2 min, or taking into consideration national regulations or standards, where mandatory. The manifolds shall withstand the hydrostatic pressure without leakage or rupture.

6.3.1.8 Adequate protection shall be given to pipes, fittings or support brackets and steelwork that are likely to be affected by corrosion. Special corrosion-resistant materials or coatings shall be used in highly corrosive atmospheres.

© ISO 2022 – All rights reserved

Licensed to Unitek Safety Solution Joint Stock Company / cao linh (caolinhbk@gmail.com)
ISO Store Order: OP-772915 license #1/ Downloaded: 2024-04-14
Single user licence only, copying and networking prohibited.

6.3.2 Piping

6.3.2.1 Piping shall be of non-combustible material having physical and chemical characteristics such that its integrity under stress can be predicted with reliability. The need for the thickness of the pipe wall to be calculated in accordance with national regulations or standards shall be considered. If higher operating temperatures are approved for a given system, the design pressure shall be adjusted to the developed pressure at maximum temperature. In performing this calculation, all joint factors and threading, grooving or welding allowances shall be taken into account. If selector valves are used, this lower maximum working pressure shall not be used upstream of the selector valves.

6.3.2.2 Cast iron and non-metallic pipes shall not be used.

6.3.2.3 Flexible tubing or hoses (including connections) shall be of approved materials and shall be suitable for service at the anticipated carbon dioxide pressure and maximum and minimum temperatures.

6.3.2.4 Piping for low-pressure systems shall be capable of withstanding a test pressure of 4 MPa (40 bar).

6.3.2.5 Closed sections of high-pressure systems piping shall be capable of withstanding test pressures of 21,0 MPa (210 bar). All other sections of pipework for high-pressure systems shall be capable of withstanding a test pressure of 9,0 MPa (90 bar).

6.3.3 Fittings

6.3.3.1 Fittings shall have a minimum rated working pressure greater than or equal to the piping design pressure.

6.3.3.2 Cast iron fittings, other than ductile or malleable cast iron, shall not be used.

NOTE In some countries it is not permitted to use any type of cast iron.

6.3.3.3 Welding and brazing alloys shall have a melting point above 500 °C.

6.3.3.4 The need for welding to be performed in accordance with national regulations or standards shall be considered.

6.3.3.5 Where copper, stainless steel or other suitable tubing is joined with compression fittings, the manufacturer's pressure/temperature ratings of the fitting shall not be exceeded, and care shall be taken to ensure the integrity of the assembly.

6.3.4 Pipe and valve support

Pipe and valve support shall be of non-combustible material, shall be suitable for the expected temperature and shall be able to withstand the dynamic and static forces involved.

Due allowance shall be made for the stresses induced in the pipework by temperature variations. Adequate environmental protection shall be given to supports and associated steelwork. The distance between pipe supports shall be as specified in Table 4.

Adequate support shall be provided for nozzles and their reactive forces such that in no case shall the distance from the last support be greater than the following:

a) ≤ 25 mm pipe, ≤ 100 mm;

b) > 25 mm pipe, ≤ 250 mm.

© ISO 2022 – All rights reserved

Licensed to Unitek Safety Solution Joint Stock Company / cao linh (caolinhbk@gmail.com)
ISO Store Order: OP-772915 license #1/ Downloaded: 2024-04-14
Single user licence only, copying and networking prohibited.

Movement of pipework caused by temperature fluctuations arising from the environment or the discharge of carbon dioxide can be considerable, particularly over long lengths, and should be considered in the support fixing methods.

Table 4 — Maximum pipework spans

Nominal diameter of pipe DN	Maximum pipework span m
6 10	0,5 1,0
15 20 25	1,5 1,8 2,1
32 40 50	2,4 2,7 3,4
65 80 100	3,5 3,7 4,3
125 150 200	4,8 5,2 5,8

6.3.5 Valves

6.3.5.1 All valves, gaskets, O-rings, sealants and other valve components shall be constructed of materials that are compatible with carbon dioxide and shall be suitable for the envisaged pressures and temperatures.

6.3.5.2 Valves shall be protected against mechanical, chemical or other damage.

6.3.5.3 Corrosion-resistant materials or coatings shall be used in corrosive atmospheres.

6.3.5.4 Valves shall be of approved materials and shall be suitable for service at the anticipated carbon dioxide pressure and maximum and minimum temperatures according to ISO 16003.

NOTE National regulations can require the use of other product standards, for example the EN 12094 series in Europe.

6.3.6 Nozzles

6.3.6.1 Nozzle choice and location

6.3.6.1.1 Nozzles shall be located with the geometry of the enclosure taken into consideration.

NOTE National regulations can require the use of other product standards, for example the EN 12094 series in Europe.

The type number and placement of nozzles shall be such that:

a) the design concentration is achieved in all parts of the enclosure, or as otherwise approved,

b) the discharge does not unduly splash flammable liquids or create dust clouds that can extend the fire, create an explosion, or otherwise adversely affect the occupants, and

c) the velocity of discharge does not adversely affect the enclosure or its contents.

© ISO 2022 – All rights reserved

Licensed to Unitek Safety Solution Joint Stock Company / cao linh (caolinhbk@gmail.com)
ISO Store Order: OP-772915 license #1/ Downloaded: 2024-04-14
Single user licence only, copying and networking prohibited.

6.3.6.1.2 Where clogging by foreign materials is possible, the discharge nozzles shall be provided with frangible discs or blow-out caps. These devices shall provide an unobstructed opening upon system operation and shall be designed and arranged so that they will not injure personnel.

6.3.6.1.3 Nozzles shall be suitable for the intended use and shall be approved for discharge characteristics, including area coverage and height limitations.

For total flooding systems nozzles are typically located within 300 mm of the top of the room. For rooms of a height from 5 m to 10 m, additional nozzles should be provided at a level of approximately one-third of the room height.

For rooms exceeding 10 m in height, additional nozzles should be installed at a level of one-third and two-thirds of the room height.

6.3.6.1.4 Nozzles shall be of adequate strength for use with the expected working pressures; they shall be able to resist nominal mechanical abuse and shall be constructed to withstand expected temperatures without deformation.

6.3.6.1.5 Nozzle discharge orifice inserts shall be of corrosion-resistant material.

6.3.6.1.6 The cross-sections of the openings of the nozzles shall be calculated in accordance with Annex B, or any other approved method, with a minimum pressure at the entrance to the nozzles of 1,4 MPa (14 bar) for high pressure systems and 1 MPa (10 bar) for low-pressure systems.

6.3.6.1.7 Local application system nozzles shall be designed and installed so as to direct carbon dioxide on o the object to be protected without dispersing burning material and shall be connected and supported so that they cannot readily be put out of adjustment.

6.3.6.2 Nozzles in ceiling tiles

In order to minimize the possibility of lifting or displacement of lightweight ceiling tiles, precautions shall be taken to securely anchor tiles for a minimum distance of 1,5 m from each discharge nozzle.

NOTE The discharge velocities created by the design of nozzles can be a factor in the displacement of ceiling tiles.

6.3.6.3 Marking

Discharge nozzles shall be permanently marked to identify the manufacturer and size of the orifice.

6.4 Enclosures (total flooding)

6.4.1 Structural strength

Automatic pressure relief shall be provided at the highest point of any room which is tightly closed, and which would otherwise be subjected to a dangerous increase of pressure when carbon dioxide is introduced.

The protected enclosure shall have sufficient structural strength and integrity to contain the carbon dioxide discharge. Venting shall be provided to prevent excessive over-pressurization of the enclosure. For very tight enclosures, the necessary area of free venting shall be calculated from Formula (1):

$$X = \frac{239Q}{\sqrt{P}} \tag{1}$$

© ISO 2022 – All rights reserved

Licensed to Unitek Safety Solution Joint Stock Company / cao linh (caolinhbk@gmail.com)
ISO Store Order: OP-772915 license #1/ Downloaded: 2024-04-14
Single user licence only, copying and networking prohibited.

where

X is the free venting area, in mm^2;

Q is the calculated carbon dioxide flow rate, in kg/min;

P is the allowable strength of enclosure, in kPa.

Pressure relief devices shall be open only in the case of overpressure in the enclosure. They shall close automatically when the excess pressure has decreased.

6.4.2 Loss through openings

6.4.2.1 To prevent loss of carbon dioxide through openings to adjacent hazards or work areas, openings shall be permanently sealed or equipped with automatic closures.

6.4.2.2 Openings are not permitted when a hold time is required, unless additional carbon dioxide is applied to maintain the required concentration during the specified hold time period.

6.4.2.3 For deep-seated fires, un-closable openings shall be restricted to those bordering, or actually in, the ceiling.

6.4.2.4 To prevent fire from spreading through openings to adjacent hazards or work areas that can be possible re-ignition sources, such openings shall be provided with automatic closures or local application nozzles. The quantity of carbon dioxide required for such protection shall be in addition to the normal requirement for total flooding.

6.4.3 Ventilation systems

Forced-air ventilation systems shall be shut down or closed automatically where their continued operation would adversely affect the performance of the fire-extinguishing system or result in propagation of the fire. Ventilation systems necessary to ensure safety are not required to be shut down upon system activation. An extended carbon dioxide discharge shall be provided to maintain the design concentration for the required duration of protection. The volumes of both ventilated air and the ventilation system ductwork shall be considered as part of the total hazard volume when determining carbon dioxide quantities.

6.5 Detection, actuation and control systems

6.5.1 General

Detection, actuation and control systems may be either automatic or manual. Where they are automatic, provision shall also be made for manual operation.

The need for detection, actuation, alarm and control systems to be installed, tested and maintained in accordance with national regulations and standards shall be considered.

Unless otherwise specified in mandatory national regulations or standards, 24 h minimum standby sources of energy shall be used to provide for operation of the detection, signalling, control and actuation requirements of the system.

6.5.2 Shut-down of plant and equipment

All services within the protected hazard (e.g. fuel and power supplies, heating appliances, paint spraying) that are likely to impair the performance of the extinguishing system shall be shut down prior to, or simultaneously with, the discharge of the carbon dioxide.

© ISO 2022 – All rights reserved

Licensed to Unitek Safety Solution Joint Stock Company / cao linh (caolinhbk@gmail.com)
ISO Store Order: OP-772915 license #1/ Downloaded: 2024-04-14
Single user licence only, copying and networking prohibited.

6.5.3 Automatic detection

Automatic detection shall be by any method or device acceptable to the authority and shall be capable of early detection and indication of heat, flame, smoke, combustible vapours, or any abnormal condition in the hazard that is likely to produce fire.

Where the detection system is configured for dual detection (coincidence) operation for extinguishing agent release, the dual detectors shall be located to provide not more than half the area coverage as specified in the relevant part of the ISO 7240 series for that type of detector.

NOTE 1 National regulations can require the use of other product standards, for example the EN 12094 series, in Europe.

NOTE 2 Detectors installed at the maximum approved spacing for fire alarm use can result in excessive delay in carbon dioxide release, especially where more than one detection device is required to be in alarm before automatic actuation results. Additional consideration should be given to detector spacing for areas with high airflow.

6.5.4 Operating devices

6.5.4.1 General

Unless otherwise specified by the authority having jurisdiction, operating devices shall cause the simultaneous opening of all the container valves connected to a manifold for one extinguishing zone.

If several extinguishing zones are served by one carbon dioxide battery or one container system, a selector valve shall be provided for each extinguishing zone.

Selector valves for container systems shall open automatically before or at the same time as the operation of the container valves.

6.5.4.2 Automatic operation

Automatic systems shall be controlled by automatic fire detection and actuation systems suitable for the system and hazard and shall also be provided with a means of manual operation.

Automatic systems shall perform all functions necessary for the successful operation of the system, including time delay and ancillary functions (for example, equipment shut-down, damper closure and fuel shut-off). All ancillary equipment shall incorporate manual reset facilities.

Where electrically operated fire detection systems are used, these shall be approved. The electric power supply shall be independent of the supply for the hazard area and shall include an emergency secondary power supply with automatic changeover in case the primary supply fails.

When two or more detectors are used, such as those for detecting smoke or flame, it is preferable for the system to operate only after signals from two detectors have been received.

6.5.4.3 Manual operation

Provision shall be made for manual operation of the firefighting system by means of a control situated outside the protected space or adjacent to the main exit from the space.

In addition to any means of automatic operation, the system shall be provided with the following:

a) one or more means, remote from the containers, of manual operation; and

b) a manual device for providing direct mechanical actuation of the system and an electrical manual release system in which the control equipment monitors for abnormal conditions in the power supply and provides a signal when the power source is inadequate.

© ISO 2022 – All rights reserved

Licensed to Unitek Safety Solution Joint Stock Company / cao linh (caolinhbk@gmail.com)
ISO Store Order: OP-772915 license #1/ Downloaded: 2024-04-14
Single user licence only, copying and networking prohibited.

Manual operation shall cause simultaneous operation of the appropriate automatically operated valves for extinguishant release and distribution.

NOTE 1 National standards cannot require a manual release or can require the release to operate via the pre-discharge alarms and time delay.

The manual operation device shall incorporate a double action or other safety device to restrict accidental operation. The device shall be provided with a means of preventing operation during maintenance of the system.

NOTE 2 The choice of the means of operation depends upon the nature of the hazard to be protected. Automatic fire detection and alarm equipment is normally provided on a manual system to indicate the presence of a fire.

6.5.4.4 Pilot operation

Where gas pressure from pilot containers is used as a means of releasing the remaining containers, the supply and discharge rate shall be designed to release all of the remaining containers simultaneously, and the pilot gas supply shall be continuously monitored, and a fault alarm given in the event of pressure loss that would not permit release.

6.5.5 Control equipment

6.5.5.1 Electric control equipment

Electric control equipment shall be used to supervise the detecting circuits, manual and automatic releasing circuits, signalling circuits, electrical actuating devices, lock-off devices, and associated wiring and, when required, cause actuation. The control equipment shall be capable of operation with the number and type of actuating devices utilized.

Control and indicating equipment (c.i.e.) shall conform with this document and with ISO 7240-2. Specific requirements include the following:

a) When the extinguishing system is designed for the simultaneous protection of multiple enclosures, the power supplies shall be calculated to satisfy the maximum simultaneous demand.

b) A visual indicator shall be provided to indicate discharge.

NOTE 1 An indication that a signal has been sent to initiate the extinguishing agent discharge device does not satisfy this requirement.

NOTE 2 National regulations can require the use of other product standards, for example the EN 12094 series in Europe.

6.5.5.2 Electrical actuators

Removal of an electrical actuator from the agent storage container valve or selector valve that it controls shall result in an audible and visual alarm of system impairment at the control panel.

6.5.5.3 Pneumatic control equipment

Where pneumatic control equipment is used, the lines shall be protected against crimping and mechanical damage. Where installations could be exposed to conditions that could lead to loss of integrity of the pneumatic lines, special precautions shall be taken to ensure that no loss of integrity will occur.

© ISO 2022 – All rights reserved

Licensed to Unitek Safety Solution Joint Stock Company / cao linh (caolinhbk@gmail.com)
ISO Store Order: OP-772915 license #1/ Downloaded: 2024-04-14
Single user licence only, copying and networking prohibited.

6.5.5.4 Mechanical cable release systems

Mechanical cables shall be run within protective tubes and the force required to operate shall not exceed:

a) 180 N for hand operation;

b) 50 N for finger-pull operation; or

c) 10 N for finger-push operation.

NOTE National regulations can require the use of product standards, for example the EN 12094 series in Europe.

6.5.6 Audible alarms and visual indicators

6.5.6.1 Except for systems protecting unoccupiable areas, other than underfloor areas, audible alarms and visual fire alarm warning devices shall be provided.

6.5.6.2 Operation of the first detector in a system configured for coincidence detection operation shall cause a visual 'FIRE ALARM' indication to illuminate and the 'ALERT' tone, as specified by ISO 7731 or by national requirements, to sound immediately upon the receipt of a signal from the protected area.

6.5.6.3 Initiation of the extinguishing agent discharge by:

a) operation of any detector on single detection systems or as specified by national requirements,

b) operation of a second detector on coincidence detection systems or as specified by national requirements, or

c) manual initiation or as specified by national requirements. This shall cause the pre-discharge alarm 'DO NOT ENTER' and 'EVACUATE AREA' visual warning devices to illuminate and the 'EVACUATE' tone to sound as specified by ISO 8201 or by national requirements.

6.5.6.4 Any condition that inhibits the discharge of the extinguishing agent shall cause the 'EXTINGUISHING SYSTEM INOPERATIVE' visual warning device or indication to illuminate. The conditions include, but are not limited to, the following or as specified by national requirements:

a) operation of an isolate/disable switch;

b) fault in the actuator circuit;

c) operation of a lock-off valve (where fitted);

d) operation of an automatic/manual switch (where fitted);

e) isolation or fault, in any part of the fire-detection system, that prevents the automatic or manual release of extinguishing agent.

6.5.6.5 Visual warning devices, conforming with the relevant requirements of ISO 7240-23, or as specified by national requirements, shall, on operation, display letters not less than 35 mm high, and be provided as follows:

a) Incorporating the words 'FIRE ALARM' in red lettering on a black background and readily visible to the occupants of the protected area.

b) Incorporating the words 'DO NOT ENTER' in red lettering on a black background located above each access door to the spaces likely to be occasionally entered, and readily visible to persons having access to the protected area.

© ISO 2022 – All rights reserved

Licensed to Unitek Safety Solution Joint Stock Company / cao linh (caolinhbk@gmail.com)
ISO Store Order: OP-772915 license #1/ Downloaded: 2024-04-14
Single user licence only, copying and networking prohibited.

c) Incorporating the words 'EVACUATE AREA' in red lettering on a black background and readily visible to the occupants of the protected area.

d) Incorporating the words 'EXTINGUISHING SYSTEM INOPERATIVE' in yellow lettering on a black background located at the principal entry, and readily visible to persons having access to the protected area. The device shall flash at a rate of not less than 1 Hz and not more than 3 Hz.

6.6 Local control (LC) and local control stations (LCS)

Where electrical control systems are utilized, local control (LC) shall be provided by a local control station (LCS). The LCS shall incorporate a manual initiate switch, a manual release device, incorporating two separate actions or other safety feature to restrict accidental operation, which:

a) initiates the normal system discharge sequence, including fire and evacuation alarms, time delays, and equipment shutdowns; and

b) overrides the automatic/manual switch, if installed.

NOTE National regulations can require the use of product standards, for example the EN 12094 series in Europe.

Where the hazard can present a rapidly developing fire, applications can require that the manual initiate switch overrides the time delay; however, designers shall take into account the possible risk to occupants with this configuration and the loss of time to effect equipment shut downs.

The LCS may incorporate an automatic/manual switch which:

a) prevents automatic discharge of the extinguishing agent;

b) stops and resets the normal system actuation control sequence;

c) causes illumination of a yellow or amber visible indication at the LCS and c.i.e.;

d) causes an audible indication;

e) causes illumination of 'SYSTEM ISOLATED' sign where installed; and

f) does not override the operation of the manual initiate switch. The operation of this switch shall be visibly indicated at the c.i.e.

Provision shall be made for manual operation of the firefighting system by means of an LCS, situated outside the protected space or adjacent to the main exit from the space.

The LCS may be incorporated within the c.i.e. where the c.i.e. is located either within or adjacent to the protected area. Access to the LCS facilities shall not require the opening of any equipment door, and operation of the LCS controls shall not require the use of any key.

7 Carbon dioxide flow and concentration calculations

7.1 General

This clause sets out the requirements for the system flow calculations and carbon dioxide concentrations.

© ISO 2022 – All rights reserved

Licensed to Unitek Safety Solution Joint Stock Company / cao linh (caolinhbk@gmail.com)
ISO Store Order: OP-772915 license #1/ Downloaded: 2024-04-14
Single user licence only, copying and networking prohibited.

7.2 System flow calculations

7.2.1 General

System flow calculations for high-pressure carbon dioxide are carried out at a nominal carbon dioxide storage temperature of 21 °C and for low-pressure carbon dioxide at a nominal carbon dioxide storage temperature of −18 °C (see also Annex B).

NOTE Pre-engineered systems do not require a flow calculation when used within approved limitations.

7.2.2 Friction losses

Allowance shall be made for the friction losses in pipes and in container valves, dip tubes, flexible connectors, selector valves, time delay devices and other equipment within the flow line.

NOTE The flow of a liquefied gas has been demonstrated to be a two-phase phenomenon, the fluid consisting of a mixture of liquid and vapour, the proportions of which are dependent on pressure and temperature. The pressure drop is non-linear, with an increasing rate of pressure loss as the line pressure reduces by pipe friction.

7.2.3 Pressure drop

The following formula and the curves developed therefrom, or any other approved method, shall be used to determine the pressure drop in the pipeline.

The flow rate, Q, in kg/min, may be calculated using Formula (2):

$$Q^2 = \frac{0{,}8725 \times 10^{-5} \times D^{5{,}25} \times Y}{L + \left(0{,}04319 \times D^{1{,}25} \times Z\right)} \tag{2}$$

where

D is the inside pipe diameter (actual), in mm;

L is the equivalent length of pipeline, in m.

Y, Z are factors depending on storage and line pressure, and may be evaluated from Formulae (3) and (4):

$$Y = -\int_{p_1}^{p} \rho \mathrm{d}p \tag{3}$$

$$Z = -\int_{\rho_1}^{\rho} \frac{\mathrm{d}\rho}{\rho} = \ln \frac{\rho_1}{\rho} \tag{4}$$

where

p_1 is the storage pressure, in kPa (bar) (absolute);

p is the pressure at the end of pipeline, in kPa (bar) (absolute);

ρ_1 is the density at pressure p_1, in kg/m^3;

ρ is the density at pressure p, in kg/m^3;

d is the integral used in differential equations, attached to the variable (p or ρ, respectively) to denote 'differential increments' of these variables to which the interval of the integral is applied.

© ISO 2022 – All rights reserved

Licensed to Unitek Safety Solution Joint Stock Company / cao linh (caolinhbk@gmail.com)
ISO Store Order: OP-772915 license #1/ Downloaded: 2024-04-14
Single user licence only, copying and networking prohibited.

In the design of piping systems, pressure drop values can be sections of closed piping; such sections can be obtained from curves of pressure versus equivalent length for various flow rates and pipe sizes (see Annex B).

7.2.4 Valves and fittings

Valves, fittings, and check valves shall be rated for resistance coefficient or equivalent length in terms of pipe or tubing sizes with which they will be used. The equivalent length of the container valves shall be listed and shall include a siphon tube (where fitted), valve, flexible connector, check valve and any other device in the flow path.

7.2.5 As-installed calculations

If the final installation varies from the prepared drawings and calculations, new as-installed drawings and calculations shall be prepared.

7.2.6 Specific requirements

a) Allowance shall be made for changes in elevation.

b) The minimum discharge rate shall be sufficient to maintain the velocity required for turbulent flow to prevent separation.

NOTE If turbulent flow is not maintained, separation of the liquid and gaseous phases will occur, which can lead to unpredictable flow characteristics.

7.3 Carbon dioxide concentration requirements

7.3.1 Flame extinguishment

The basic carbon dioxide concentration factor is that corresponding to the material factor, K_B, calculated as follows: $K_B = 1$, i.e. 34 %.

For materials requiring a design concentration over 34 %, the basic quantity of carbon dioxide shall be increased by multiplying this quantity by the appropriate material factor given in Table 5.

For K_B factors for hazards not listed in Table 5, Formulae (5) shall be used to convert the calculated design concentration to a material factor, K_B. The extinguishing concentration from ISO 14520-1:—[4], C.6.2 multiplied by a factor of 1,3, or using a factor of 1,7 on the cup burner result shall be used to determine the design concentration.

NOTE K_B is a factor that is commonly understood in the extinguishing industry. It is similar to K-factors for sprinklers.

$$K_B = \frac{\ln(1-C)}{\ln(1-C_S)} \tag{5}$$

where

C is the design concentration (%) divided by 100;

C_S is 0,34.

4) Under preparation. Stage at the time of publication: ISO/DIS 14520-1:2022.

© ISO 2022 – All rights reserved

Licensed to Unitek Safety Solution Joint Stock Company / cao linh (caolinhbk@gmail.com)
ISO Store Order: OP-772915 license #1/ Downloaded: 2024-04-14
Single user licence only, copying and networking prohibited.

7.3.2 Inerting

Inerting concentrations shall be used where conditions for subsequent reflash or explosion could exist. These conditions exist when both:

a) the quantity of fuel permitted in the enclosure is sufficient to develop a concentration greater than or equal to one-half of the lower flammable limit throughout the enclosure, and

b) the volatility of the fuel before the fire is sufficient to reach the lower flammable limit in air (maximum ambient temperature or fuel temperature exceeds the closed cup flash point temperature), or the system response is not rapid enough to detect and extinguish the fire before the volatility of the fuel is increased to a dangerous level as a result of the fire.

The minimum design concentrations used to inert atmospheres involving combustible or flammable liquids and gases shall be determined in accordance with ISO 14520-1:—, Annex D, plus a safety factor of 10 %.

7.4 Total flooding quantity

7.4.1 General

The amount of carbon dioxide required to achieve the design concentration shall be calculated from Formula (6) and from the data presented in Table 5.

NOTE In addition to these calculated concentration requirements, additional quantities of carbon dioxide can be required by national regulations or standards to compensate for any special conditions that would adversely affect the extinguishing efficiency.

7.4.2 Design quantity

The design quantity of carbon dioxide, M, in kg, shall be calculated from Formula (6):

$$M = K_B \times (0{,}2\,A + 0{,}7\,V) \tag{6}$$

where

$A = A_V + 30\,A_{OV}$, where:

A_V is the total surface area of all sides, and of the floor and ceiling (including the openings, A_{OV}) of the enclosure to be protected, in m^2;

A_{OV} is the total surface area of all openings which can be assumed will be open in the event of a fire, in m^2 (see 7.4.3.2);

$V = V_V + V_Z - V_G$

V_V is the volume of the enclosure to be protected, in m^3;

V_Z is the additional volume removed during the hold time (see Table 5) by ventilation systems which cannot be shut down, in m^3 (see 7.4.3.1);

V_G is the volume of the building structure which can be deducted, in m^3;

K_B is the factor for the material to be protected, which shall be ≥ 1 (see 7.4.3 and Table 5);

0,2, in kg/m^2, comprises the portion of carbon dioxide that can escape;

0,7, in kg/m^3, comprises the minimum quantity of carbon dioxide taken as a basis for the formula.

© ISO 2022 – All rights reserved

Licensed to Unitek Safety Solution Joint Stock Company / cao linh (caolinhbk@gmail.com)
ISO Store Order: OP-772915 license #1/ Downloaded: 2024-04-14
Single user licence only, copying and networking prohibited.

For calculation examples, see Annex E.

NOTE The two numbers 0,2 and 0,7 take into account the effect of room size, i.e. the ratio of the room volume (V_V) to room surface area (A_V).

7.4.3 K_B factor

7.4.3.1 General

The material factor, K_B, shown in Table 5, shall be taken into account when designing for combustible materials and particular risks that require a higher-than-normal concentration.

K_B factors for hazards not listed Table 5 for fires involving gases and liquids shall be determined using the cup burner apparatus specified in ISO 14520-1:—, Annex B, or by another approved method.

Table 5 — Material factors, design concentrations and hold times

Combustible or flammable material	Material factor K_B	Design CO_2 concentration %	Hold time min
Fires involving gases and liquids[a]			
Acetone	1	34	—
Acetylene	2,57	66	—
Aviation fuel grades 115/145	1,06	36	—
Benzol, benzene	1,1	37	—
Butadiene	1,26	41	—
Butane	1	34	—
Butene-1	1,1	37	—
Carbon disuifide	3,03	72	—
Carbon monoxide	2,43	64	—
Coal or natural gas	1,1	37	—
Cyclopropane	1,1	37	—
Diesel fuel	1	34	—
Dimethyl ether	1,22	40	—
Dowtherm	1,47	46	—
Ethane	1,22	40	—
Ethyl alcohol	1,34	43	—
Ethyl ether	1,47	46	—
Ethylene	1,6	49	—
Ethylene dichloride	1	34	—

[a] Compilation of information from US Bureau of Mines, *Limits of Flammability of Gases and Vapours*, Bulletins 503 and 627[2].

[b] Fires usually of an organic nature in which combustion normally takes place with the formation of glowing embers.

© ISO 2022 – All rights reserved

Licensed to Unitek Safety Solution Joint Stock Company / cao linh (caolinhbk@gmail.com)
ISO Store Order: OP-772915 license #1/ Downloaded: 2024-04-14
Single user licence only, copying and networking prohibited.

Table 5 *(continued)*

Combustible or flammable material	Material factor K_B	Design CO_2 concentration %	Hold time min
Ethylene oxide	1,8	53	—
Gasoline	1	34	—
Hexane	1,03	35	—
N-heptane	1,03	35	—
Hydrogen	3,3	75	—
Hydrogen sulfide	1,06	36	—
Isobutane	1,06	36	—
Isobutylene	1	34	—
Isobutyl formate	1	34	—
Jp-4	1,06	36	—
Kerosene	1	34	—
Methane	1	34	—
Methyl acetate	1,03	35	—
Methyl alcohol	1,22	40	—
Methyl butane-l	1,06	36	—
Methyl ethyl ketone	1,22	40	—
Methyl formate	1,18	39	—
N-octane	1,03	35	—
Pentane	1,03	35	—
Propane	1,06	36	—
Propylene	1,06	36	
Quench, lube oils	1	34	
Fires involving solid materials[b]			
Cellulosic material	2,25	62	20
Cotton	2	58	20
Paper, corrugated paper	2,25	62	20
Plastic material (granular)	2	58	20
Polystyrene	1	34	—
Polyurethane, cured only	1	34	—
Special application cases			

[a] Compilation of information from US Bureau of Mines, *Limits of Flammability of Gases and Vapours*, Bulletins 503 and 627[2].

[b] Fires usually of an organic nature in which combustion normally takes place with the formation of glowing embers.

© ISO 2022 – All rights reserved

Licensed to Unitek Safety Solution Joint Stock Company / cao linh (caolinhbk@gmail.com)
ISO Store Order: OP-772915 license #1/ Downloaded: 2024-04-14
Single user licence only, copying and networking prohibited.

Table 5 *(continued)*

Combustible or flammable material	Material factor K_B	Design CO_2 concentration %	Hold time min
Cable rooms and cable ducts	1,5	47	10
Data handling areas	2,25	62	20
Electrical computer installations	1,5	47	10
Electrical switch and distribution rooms	1,2	40	10
Generators, including cooling systems	2	58	Until stopped
Oil filled transformers	2	58	—
Output printing areas	2,25	62	20
Paint spray and drying installations	1,2	40	—
Spinning machines	2	58	—

[a] Compilation of information from US Bureau of Mines, *Limits of Flammability of Gases and Vapours*, Bulletins 503 and 627[2].

[b] Fires usually of an organic nature in which combustion normally takes place with the formation of glowing embers.

7.4.3.2 Effect of ventilation systems that cannot be shut down

To determine the quantity of carbon dioxide to be used, the volume of the room (V_V) shall be increased by the volume of air (V_Z) charged into, or expelled from, the room while the room is flooded with carbon dioxide and during the inhibition time as stated in Table 5.

7.4.3.3 Effect of openings (see 7.4.2)

The effect of all openings, including explosion vents in walls and ceilings that will not be shut during a fire, are included in Formula (6) by A_{OV}.

The porosity of the enclosure materials, or leaks around doors, windows, shutters, etc., shall not be considered as openings, as they are already included in Formula (6).

When the ratio $R = A_{OV}/A_V > 0{,}03$, the system shall be designed as a local application system (see 7.5). This does not preclude the use of a local application system when R is less than 0,03.

When R is greater than 0,03 and where the openings can be subjected to the effects of wind, approval tests under anticipated maximum adverse conditions shall be carried out.

7.4.3.4 Effect of enclosure temperature

For applications where the normal temperature of the enclosure is above 93 °C, a protected item of equipment could be more susceptible to re-ignition. Therefore, additional carbon dioxide is recommended, holding the extinguishing concentrations for a longer period of time and allowing the extinguished material to cool down, thereby reducing the chance of re-ignition when the carbon dioxide dissipates. The additional carbon dioxide requirements shall be 1,8 % for every 5 °C above 93 °C.

For applications where the normal temperature of the enclosure is below −18 °C, a 1,8 % increase in the calculated total quantity of carbon dioxide shall be provided for every 1 °C below −18 °C.

7.4.3.5 Simultaneous flooding of interconnected volumes

In two or more interconnected volumes where “free flow” of carbon dioxide can take place, or where the possibility exists of fire spreading from one area to the other, the carbon dioxide quantity shall be the sum of the quantities calculated for each volume. If one volume requires greater than normal concentration, the higher concentration shall be used in all interconnected volumes.

© ISO 2022 – All rights reserved

Licensed to Unitek Safety Solution Joint Stock Company / cao linh (caolinhbk@gmail.com)
ISO Store Order: OP-772915 license #1/ Downloaded: 2024-04-14
Single user licence only, copying and networking prohibited.

7.5 Design of local application systems

7.5.1 General

Local application systems are suitable for the extinguishment of surface fires in flammable liquids, gases and solids where the hazard is not enclosed or where the enclosure does not conform to the requirements for total flooding.

7.5.2 Carbon dioxide requirements

The design quantity of carbon dioxide required for local application systems shall be based on the total rate of discharge needed to blanket the area or volume protected and the time that the discharge needs to be maintained to ensure complete extinguishment.

The increase in container storage capacity, as required by 6.2.2.4, shall not apply in the case of the total flooding portion of combined local application/total flooding systems.

Where there are long pipelines or where the piping can be exposed to higher-than-normal temperatures, the design quantity shall be increased by an amount sufficient to compensate for liquid vaporized in cooling the piping.

See Formula (B.8) in Annex B.

7.5.3 Rate by area method

7.5.3.1 General

The area method of system design is used where the fire hazard consists primarily of flat surfaces or low-level objects associated with horizontal surfaces.

System design shall be based on approved data for individual nozzles. Extrapolation of such data above or below the upper or lower limits shall not be valid.

For calculation examples, see Annex E.

7.5.3.2 Nozzle discharge rates

The design discharge rate through individual nozzles shall be determined on the basis of location or projection distance in accordance with specific approvals or listings.

The discharge rate for overhead type nozzles shall be determined solely on the basis of distance from the surface each nozzle protects.

The discharge rate for tank side nozzles shall be determined solely on the basis of throw or projection required to cover the surface each nozzle protects.

7.5.3.3 Area per nozzle

The maximum area protected by each nozzle shall be determined on the basis of location or projection distance and the design discharge rate shall be determined in an approved manner.

The same factors used to determine the design discharge rate shall be used to determine the maximum area to be protected by each nozzle.

The area of the hazard protected by individual overhead type nozzles shall be considered as a square.

The area of the hazard protected by individual tank side or linear nozzles shall be either rectangular or square in accordance with the manufacturer's spacing and discharge limitations. Hazards involving deep layer flammable liquid fires shall have a minimum freeboard of 150 mm in order to prevent splashing and to retain a surface concentration when carbon dioxide is applied.

© ISO 2022 – All rights reserved

Licensed to Unitek Safety Solution Joint Stock Company / cao linh (caolinhbk@gmail.com)
ISO Store Order: OP-772915 license #1/ Downloaded: 2024-04-14
Single user licence only, copying and networking prohibited.

7.5.3.4 Location and number of nozzles

A sufficient number of nozzles shall be used to cover the entire hazard area adequately on the basis of the unit areas protected by each nozzle.

Tank side or linear type nozzles shall be located in accordance with spacing and discharge rate limitations.

Overhead type nozzles shall be installed perpendicular to the hazard and centred over the area protected by the nozzle. Other nozzles shall be installed at angles between 45° and 90° from the plane of the hazard surface. The height/distance used in determining the necessary flow rate and area coverage shall be the distance from the aiming point on the protected surface to the face of the nozzle measured along the axis of the nozzle.

When installed at an angle, nozzles shall be aimed at a point measured from the near side of the area protected by the nozzle, the location of which is calculated by multiplying the aiming factor given in Table 6 by the width of the area protected by the nozzle.

Nozzles shall be located so as to be free of possible obstructions that could interfere with the proper projection of the discharged carbon dioxide.

Table 6 — Aiming factors for angular placement of nozzles

Discharge angle [a]	Aiming factor [b]
45° to 60°	1/4
60° to 75°	1/4 to 3/8
70° to 90°	3/8 to 1/2
90° (perpendicular)	1/2 (centre)

NOTE Values based on a 150 mm freeboard.

[a] Degrees from plane of hazard surface.

[b] Fractional amount of nozzle coverage area.

See also Figure 6.

© ISO 2022 – All rights reserved

Licensed to Unitek Safety Solution Joint Stock Company / cao linh (caolinhbk@gmail.com)
ISO Store Order: OP-772915 license #1/ Downloaded: 2024-04-14
Single user licence only, copying and networking prohibited.

Dimensions in millimetres

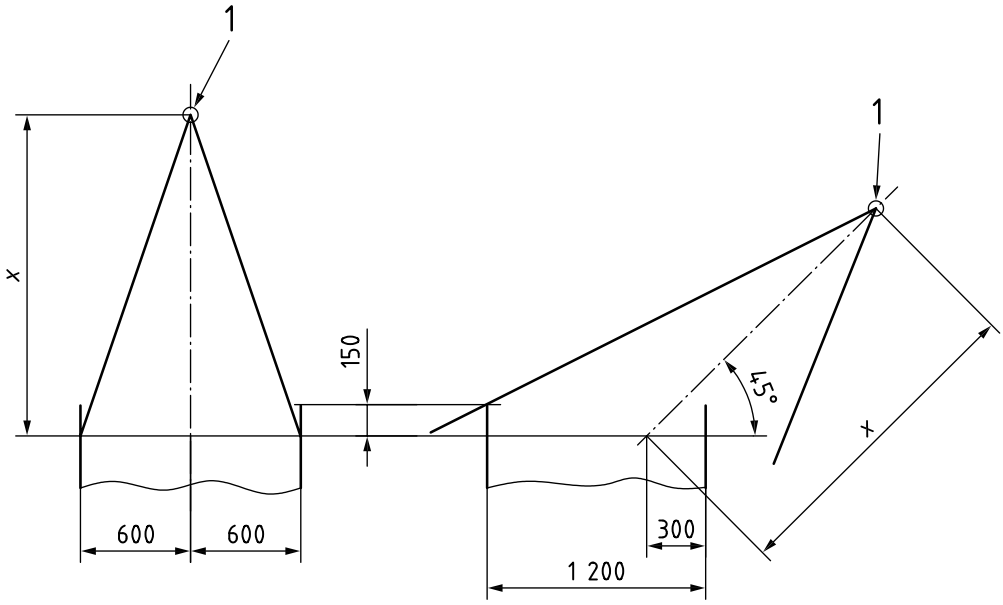

Key

1 nozzle discharging at preselected rate and pressure

x preselected height used to determine the flow rate required

NOTE The diagram shows nozzles discharging at 90°, with the aiming point at the centre of the protected surface, and at 45°, with the aiming point at 0,25 of the width of the protected surface, into a tray containing fuel with a freeboard of 150 mm.

Figure 6 — Nozzle locations

7.5.4 Rate by volume method

7.5.4.1 General

The volume method of system design is used where the fire hazard consists of three-dimensional irregular objects that cannot be easily reduced to equivalent surface areas.

For examples of calculations, see Annex E.

7.5.4.2 Assumed enclosure

The total discharge rate of the system shall be based on the volume of an assumed enclosure entirely surrounding the hazard.

If openings exist in the floor, provisions shall be made to account for these conditions.

The assumed walls and ceiling of this enclosure shall be at least 0,6 m from the main hazard, unless actual walls are involved, and shall enclose all areas of possible leakage, splashing or spillage.

No deductions shall be made for any objects within this volume.

A minimum dimension of 1,2 m shall be used in calculating the volume of the assumed enclosure.

7.5.4.3 System discharge rate

The total discharge rate for the basic system shall be not less than 16 kg/min/m^3 of assumed volume, unless the assumed enclosure has a closed floor and is partly defined by permanent continuous walls

© ISO 2022 – All rights reserved

Licensed to Unitek Safety Solution Joint Stock Company / cao linh (caolinhbk@gmail.com)
ISO Store Order: OP-772915 license #1/ Downloaded: 2024-04-14
Single user licence only, copying and networking prohibited.

extending at least 0,6 m above the hazard (where the walls are not normally part of the hazard), in which case the discharge rate may be proportionately reduced to not less than 4 kg/min/m^3 for actual walls completely surrounding the enclosure. See Figure 7.

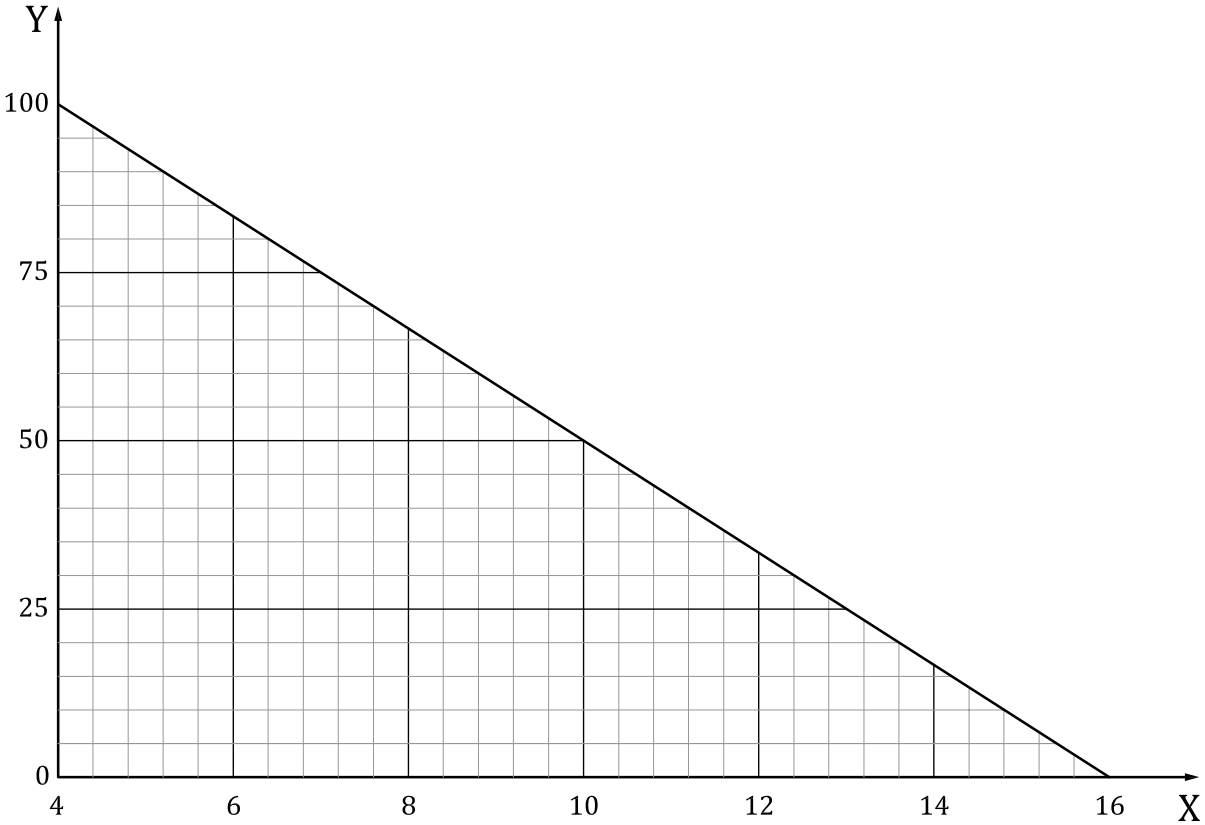

Key

X discharge rate, kg/min/m^3

Y volume of enclosed perimeter, %

NOTE Rate by volume mathematical method, e.g. 50 % enclosed.

Figure 7 — Volume discharge rate

7.5.4.4 Location and number of nozzles

A sufficient number of nozzles shall be used to cover the entire hazard volume adequately on the basis of the system discharge rate as determined by the assumed volume.

Nozzles shall be located and directed relative to objects in the enclosure so as to retain the discharged carbon dioxide in the hazard volume.

The design discharge rates through individual nozzles shall be determined on the basis of location or projection distance in accordance with specific approvals for surface fires.

7.6 Duration of protection — total flooding systems

7.6.1 It is important that an effective carbon dioxide concentration be not only achieved but maintained for a sufficient period of time to allow effective emergency action. This is equally important in all classes of fire, since a persistent ignition source (e.g. arc, heat source, oxyacetylene torch, or "deep-seated" fire) can lead to resurgence of the initial event once the carbon dioxide has dissipated.

© ISO 2022 – All rights reserved

Licensed to Unitek Safety Solution Joint Stock Company / cao linh (caolinhbk@gmail.com)
ISO Store Order: OP-772915 license #1/ Downloaded: 2024-04-14
Single user licence only, copying and networking prohibited.

7.6.2 It is essential to determine the likely period during which the extinguishing concentration will be maintained within the protected enclosure. This is known as the hold time. The predicted hold time shall be determined by the door fan test in accordance with ISO 14520-1, or a full discharge test based on the following criteria:

a) at the start of the hold time, the concentration throughout the enclosure shall be the design concentration;

b) at the end of the hold time, the carbon dioxide concentration shall not be less than 85 % of the design concentration at not less than the height of the highest hazard in the protected enclosure;

c) the hold time shall not be less than specified in Table 5, unless otherwise accepted by the authority.

NOTE The temperature decrease during the flooding can lead to less CO_2 concentration than the design concentrations according to Table 5.

7.7 System performance

7.7.1 Discharge time

For total flooding systems, the design quantity shall be discharged in accordance with the times in Table 7. For local application systems, the flow rate shall be maintained for the times in accordance with Table 7.

Table 7 — Discharge times for surface fires

System	Carbon dioxide high-pressure installation liquid discharge	Carbon dioxide low-pressure installation	
		Pre-liquid vapour flow time	Liquid discharge time
Total flooding	max. 60 s	max. 120 s (max. 60 s pre-liquid vapour flow time)	
Local application	min. 30 s	max. 30 s	min. 30 s

For fires involving solid materials, for example those listed in Table 4 as requiring a hold time, the design quantity shall be discharged within 7 min, but the rate shall be not less than that necessary to develop a concentration of 30 % in 2 min.

7.7.2 Extended discharge

When an extended discharge is necessary, the rate shall be sufficient to maintain the desired concentration for the required hold time in accordance with 7.6.2.

8 Commissioning and acceptance

8.1 General

This clause sets out the minimum requirements for commissioning and accepting a carbon dioxide extinguishing system.

8.2 Tests

8.2.1 General

The completed system shall be reviewed and tested by competent persons to meet the approval of the authority. To determine that the system has been properly installed using equipment and devices designed to meet national regulations or standards and that it will function as specified, the tests specified in 8.2.2 to 8.2.9 shall be performed.

© ISO 2022 – All rights reserved

Licensed to Unitek Safety Solution Joint Stock Company / cao linh (caolinhbk@gmail.com)
ISO Store Order: OP-772915 license #1/ Downloaded: 2024-04-14
Single user licence only, copying and networking prohibited.

8.2.2 Enclosure check

Determine that the protected enclosure conforms to the plans.

8.2.3 Review of mechanical components

8.2.3.1 The piping distribution system shall be inspected to determine that it conforms to the design and installation documents.

8.2.3.2 Nozzles and pipe size shall be in accordance with system drawings. The means for pipe size reduction and attitudes of tees shall be checked for conformance to the design.

8.2.3.3 Piping joints, discharge nozzles and piping supports shall be securely fastened to prevent unacceptable vertical or lateral movement during discharge. Discharge nozzles shall be installed in such a manner that piping cannot become detached during discharge.

8.2.3.4 During assembly, the piping distribution system shall be inspected internally to detect the possibility that any oil or particulate matter could soil the hazard area or affect the carbon dioxide distribution due to a reduction in the effective nozzle orifice area.

8.2.3.5 The discharge nozzles shall be oriented in such a manner that optimum carbon dioxide dispersal can be affected.

8.2.3.6 If nozzle deflectors are installed, they shall be positioned to obtain the maximum benefit.

8.2.3.7 The discharge nozzles, piping and mounting brackets shall be installed in such a manner that they will not potentially cause injury to personnel. Carbon dioxide shall not directly impinge on areas where personnel could be found in the normal work area, or on any loose objects or shelves, cabinet tops, or similar surfaces where loose objects could be present and become projectiles.

8.2.3.8 All carbon dioxide storage containers shall be properly located in accordance with an “approved for construction” set of system drawings.

8.2.3.9 All containers and mounting brackets shall be securely fastened in accordance with the manufacturer's requirements.

8.2.3.10 A discharge test for extinguishants is generally not recommended. However, if a discharge test is to be conducted, the mass of extinguishant shall be determined by weighing or other approved methods. Concentration measurements should be made at a minimum of three points, one at the highest hazard level.

Other assessment methods may normally be used to reduce unnecessary discharge into the environment, for example the door fan pressurization test specified in ISO 14520-1. However, a discharge test may be conducted if acceptable to the authority.

8.2.3.11 An adequate quantity of carbon dioxide to produce the specified design concentration shall be provided. The actual enclosure volumes shall be checked against those indicated on the system drawings to ensure the proper quantity of carbon dioxide. Fan rundown and damper closure time shall be taken into consideration.

© ISO 2022 – All rights reserved

Licensed to Unitek Safety Solution Joint Stock Company / cao linh (caolinhbk@gmail.com)
ISO Store Order: OP-772915 license #1/ Downloaded: 2024-04-14
Single user licence only, copying and networking prohibited.

8.2.3.12 Unless the total piping contains not more than one change in direction fitting between the storage container and the discharge nozzle, and unless all piping has been physically checked for tightness, the following tests shall be carried out.

a) All open-ended piping shall be pneumatically tested in a closed circuit for a period of 10 min at 3 bar. At the end of 10 min, the pressure drop shall not exceed 20 % of the test pressure.

b) All closed-section pipework and pipework upstream of pressure-reducing devices shall be hydrostatically tested to a minimum of 1,5 times the maximum working pressure for 2 min during which there shall be no leakage.

NOTE Where this test is not suitable for closed pipework connected to low pressure storage units, it is recommended that, where practicable, hydrostatic testing be carried out at the manufacturer's premises.

WARNING — Pneumatic pressure testing creates a potential risk of injury to personnel in the area, as a result of airborne projectiles if rupture of the piping system occurs. Prior to conducting the pneumatic pressure test, the protected area shall be evacuated and appropriate safeguards shall be provided for test personnel.

8.2.3.13 A flow test using nitrogen, or a suitable alternative, shall be performed on the piping network to verify that flow is continuous and that the piping and nozzles are unobstructed.

8.2.4 Review of enclosure integrity

All total flooding systems shall have the enclosure checked to locate and then effectively seal any significant openings that could result in a failure of the enclosure to hold the specified design concentration for the specified holding period (see also 7.4.2). Unless otherwise agreed, the test specified in ISO 14520-1, shall be used.

Review the structural integrity of the enclosure and assess its ability to withstand the developed pressure fluctuations during system discharge taking into account:

a) the equivalent leakage area determined from the enclosure integrity test, where permitted;

b) the provision of any required additional pressure vents; and

c) the pressure relief vent operation.

Further guidance on gaseous system venting can be found in ISO 21805:—[5].

8.2.5 Review of electrical components

8.2.5.1 All wiring systems shall be properly installed in compliance with the appropriate national standard and the system drawings. The A.C. and D.C. wiring shall not be combined in a common conduit unless properly shielded and earthed

8.2.5.2 All field circuitry shall be tested for ground fault and short circuit condition. When testing field circuitry, all electronic components (such as smoke and flame detectors or special electronic equipment for other detectors, or their mounting bases) shall be removed and jumpers properly installed to prevent the possibility of damage within these devices. Components shall be replaced after testing the circuits.

8.2.5.3 Adequate and reliable primary and emergency secondary sources of power conforming to 6.5.4.2 shall be used to provide for operation of the detection, signalling, control and actuation requirements of the system.

5) Under preparation. Stage at the time of publication: ISO/FDIS 21805:2022.

© ISO 2022 – All rights reserved

Licensed to Unitek Safety Solution Joint Stock Company / cao linh (caolinhbk@gmail.com)
ISO Store Order: OP-772915 license #1/ Downloaded: 2024-04-14
Single user licence only, copying and networking prohibited.

8.2.5.4 All auxiliary functions (alarm sounding or displaying devices, remote annunciators, air handling shutdown, power shutdown, etc.) shall be checked for proper operation in accordance with system requirements and design specifications.

Alarm devices shall be installed so that they are audible and visible under normal operating and environmental conditions.

Where possible, all air-handling and power cut-off controls should be of the type that, once interrupted, require manual restart to restore power.

8.2.5.5 Check that for systems using alarm silencing, this function does not affect other auxiliary functions such as air handling or power cut-off where they are required in the design specification.

8.2.5.6 Check the detection devices to ensure that the types and locations are as specified in the system drawings and are in accordance with the manufacturer's requirements.

8.2.5.7 Check that manual release devices are properly installed, and are readily accessible, accurately identified and properly protected to prevent damage.

8.2.5.8 Check that all manual release devices require two separate and distinct actions for operation. The manual release device shall be properly identified. Particular care shall be taken where manual release devices for more than one system are in close proximity and could be confused, actuating the wrong system. Manual release devices in this instance shall be clearly identified as to which hazard enclosure they protect.

8.2.5.9 Check that for systems with a main/reserve capability, the main/reserve switch is properly installed, readily accessible and clearly identified.

8.2.5.10 Check that the control panel is properly installed and readily accessible.

8.2.6 Preliminary functional tests

8.2.6.1 Where a system is connected to a remote central alarm station, notify the station that the fire system test is to be conducted and that an emergency response by the fire department or alarm station personnel is not required. Notify all concerned personnel at the end-user's facility that a test is to be conducted and instruct them as to the sequence of operation.

8.2.6.2 Disable or remove each carbon dioxide storage container release mechanism and selector valve, where fitted, so that activation of the release circuit will not release carbon dioxide. Reconnect the release circuit with a functional device in lieu of each carbon dioxide storage container release mechanism.

For electrically actuated release mechanisms, these devices can include suitable lamps, flash bulbs or circuit breakers. Pneumatically actuated release mechanisms can include pressure gauges. Refer to the manufacturer's recommendations in all cases.

8.2.6.3 Check each resettable detector for proper response.

8.2.6.4 Check that polarity has been observed on all polarized alarm devices and auxiliary relays.

8.2.6.5 Check that all required end-of-line devices have been installed.

8.2.6.6 Check all supervised circuits for correct fault response.

© ISO 2022 – All rights reserved

Licensed to Unitek Safety Solution Joint Stock Company / cao linh (caolinhbk@gmail.com)
ISO Store Order: OP-772915 license #1/ Downloaded: 2024-04-14
Single user licence only, copying and networking prohibited.

8.2.7 System functional operational test

8.2.7.1 Operate the detection initiating circuit(s). All alarm functions shall occur according to the design specification.

8.2.7.2 Operate the necessary circuit to initiate a second alarm circuit, if present. Verify that all secondary alarm functions occur according to design specifications.

8.2.7.3 Operate the manual release device. Verify that manual release functions occur according to design specifications.

8.2.7.4 Verify that functions occur according to the design specifications. Confirm that visual and audible supervisory signals are received at the control panel.

8.2.7.5 Check the function of all resettable valves and actuators, unless testing the valve will release carbon dioxide.

"One-shot" valves, such as those incorporating frangible discs, should not be tested.

8.2.7.6 Check pneumatic equipment, where fitted, for integrity, to ensure proper operation.

8.2.8 Remote monitoring operations (if applicable)

8.2.8.1 Disconnect the primary power supply, then operate one of each type of input device while on standby power. Verify that an alarm signal is received at the remote panel after the device is operated. Reconnect the primary power supply.

8.2.8.2 Simulate each type of fault condition and verify receipt of fault conditions at the remote station.

8.2.9 Control panel primary power source

8.2.9.1 Verify that the control panel is connected to a dedicated unswitched circuit and is labelled properly. This panel shall be readily accessible, but access shall be restricted to authorized personnel only.

8.2.9.2 Test a primary power failure in accordance with the manufacturer's specification, with the system fully operated on standby power.

8.2.10 Completion of functional tests

When all functional tests are complete (8.2.6 to 8.2.9), reconnect each storage container so that activation of the release circuit will release the carbon dioxide. Return the system to its fully operational design condition. Notify the central alarm station and all personnel concerned at the end-user's facility that the fire system test is complete, and that the system has been returned to full-service condition by following the procedures specified in the manufacturer's specifications.

8.3 Completion certificate and documentation

The installer shall provide the user with a completion certificate, a complete set of instructions, calculations and drawings showing the system as-installed, and a statement that the system conforms to all the appropriate requirements of this document, giving details of any departure from appropriate recommendations. The certificate shall give the design concentrations and, if carried out, reports of any additional test, including the door fan test.

© ISO 2022 – All rights reserved

Licensed to Unitek Safety Solution Joint Stock Company / cao linh (caolinhbk@gmail.com)
ISO Store Order: OP-772915 license #1/ Downloaded: 2024-04-14
Single user licence only, copying and networking prohibited.

See also A.4, Table A.1 and Table A.1.

9 Inspection, maintenance, testing and training

9.1 General

This clause specifies the requirements for inspection, maintenance and testing of the carbon dioxide fire extinguishing system and for the training of inspection and maintenance personnel.

9.2 Inspection

9.2.1 General

9.2.1.1 At least annually, or more frequently if required, all systems shall be thoroughly inspected and tested for proper operation by competent personnel.

9.2.1.2 The inspection report with recommendations shall be filed with the owner.

9.2.1.3 At least every six months, the container contents shall be checked. Containers that show a loss in carbon dioxide quantity of more than 10 % mass shall be refilled or replaced.

9.2.1.4 The date of inspection and the name of the person performing the inspection shall be recorded on a tag attached to the container.

9.2.2 Container

Containers shall be subjected to periodical tests as required by the relevant national standard.

9.2.3 Hose

All system hoses shall be examined annually for damage. If visual examination shows any defect, the hose shall be replaced.

9.2.4 Enclosures

9.2.4.1 At least every 12 months, it shall be determined whether boundary penetration or other changes to the protected enclosure have occurred that could affect leakage and carbon dioxide performance. If this cannot be visually determined, it shall be positively established by repeating the test for enclosure integrity in accordance with ISO 14520-1.

9.2.4.2 Where the integrity test reveals increased leakage that would result in an inability to retain the carbon dioxide for the required period, remedial action shall be carried out.

9.2.4.3 Where it is established that changes to the volume of the enclosure or to the type of hazard within the enclosure, or both, have occurred, the system shall be redesigned to provide the original degree of protection.

It is recommended that the type of hazard within the enclosure, and the volume it occupies, be regularly checked to ensure that the required concentration of carbon dioxide can be achieved and maintained.

© ISO 2022 – All rights reserved

Licensed to Unitek Safety Solution Joint Stock Company / cao linh (caolinhbk@gmail.com)
ISO Store Order: OP-772915 license #1/ Downloaded: 2024-04-14
Single user licence only, copying and networking prohibited.

9.3 Maintenance

9.3.1 General

The user shall carry out a programme of inspection, arrange a service schedule, and keep records of the inspections and servicing.

NOTE The continued capability for effective system performance depends on fully adequate service procedures together with, where possible, periodic testing.

Installers shall provide the user with a record in which inspection and service details can be entered.

9.3.2 User's programme of inspection

The installer shall provide the user with an inspection programme for the system and components. This programme shall include instructions on the action to be taken in respect of faults.

The user's inspection programme is intended to detect faults at an early stage in order to allow rectification before the system has to operate. A suitable programme is as follows.

a) Weekly

Visually check the hazard and the integrity of the enclosure for changes which might reduce the efficiency of the system. Carry out a visual check, ensuring that there is no obvious damage to pipework and that all operating controls and components are properly set and undamaged. Check pressure gauges and weighing devices, if fitted, for correct reading and take the appropriate action specified in the user's manual.

b) Monthly

Check that all personnel who can have to operate the equipment or system are properly trained and authorized to do so and, in particular, that new employees have been instructed in its use.

9.3.3 Service schedule

A service schedule shall include requirements for periodic inspection and testing of the completely installed system, including pressurized containers.

The schedule shall be carried out by a competent person who shall provide the user with a signed and dated report of the inspection, advising on any rectification carried out or needed.

During servicing, utmost care and precaution shall be taken to avoid release of carbon dioxide.

NOTE A suitable schedule is given in Annex C.

9.4 Training

All persons who can be expected to inspect, test, maintain or operate the carbon dioxide fire extinguishing system shall be trained and kept adequately trained in the functions they are expected to perform.

Personnel working in an enclosure protected by carbon dioxide shall receive training in the operation and use of the system, in particular regarding safety issues.

© ISO 2022 – All rights reserved

Licensed to Unitek Safety Solution Joint Stock Company / cao linh (caolinhbk@gmail.com)
ISO Store Order: OP-772915 license #1/ Downloaded: 2024-04-14
Single user licence only, copying and networking prohibited.

Annex A
(normative)

Working documents

A.1 General

The documents described in this annex shall be prepared only by persons fully experienced in the design of carbon dioxide extinguishing systems. Deviation from these documents shall require permission from the relevant authority.

A.2 Working documents

Working documents shall include the following items:

a) drawings, to an indicated scale, of a carbon dioxide distribution system, including containers, location of containers, piping and nozzles, valves and pipe hanger spacing;

b) name of owner and occupant;

c) location of building in which hazard is located;

d) location and construction of protected enclosure walls and partitions;

e) enclosure cross-section, full height or schematic diagram, including raised access floor and suspended ceiling;

f) extinguishing or inerting concentration, design concentration and maximum concentration;

g) description of occupancies and hazards to be protected against;

h) specification of containers used, including capacity, storage pressure and mass, including carbon dioxide;

i) description of nozzle(s) used, including inlet size, orifice port configuration, and orifice size/code, if applicable;

j) description of pipes, valves and fittings used, including material specifications, grade and pressure rating;

k) equipment schedule or bill of materials for each piece of equipment or device, showing device name, manufacturer, model or part number, quantity and description;

l) isometric view of a carbon dioxide distribution system, showing the length and diameter of each pipe segment and node reference numbers relating to the flow calculations;

m) enclosure pressurization and venting calculations;

n) description of fire detection, actuation and control systems.

© ISO 2022 – All rights reserved

Licensed to Unitek Safety Solution Joint Stock Company / cao linh (caolinhbk@gmail.com)
ISO Store Order: OP-772915 license #1/ Downloaded: 2024-04-14
Single user licence only, copying and networking prohibited.

A.3 Specific details

A.3.1 Pre-engineered systems

For pre-engineered systems, the end-user shall be provided with the manufacturer's system design and maintenance information.

A.3.2 Engineered systems

For engineered systems, the end-user shall be provided with the manufacturer's system design and maintenance information.

Details of the system shall include the following:

a) information and calculations on the amount of carbon dioxide;

b) container storage pressure and carbon dioxide quantity;

c) capacity of the container;

d) the location, type and flow rate of each nozzle, including equivalent orifice area, if applicable;

e) the location, size and equivalent lengths or resistance coefficients of pipe fittings and hoses; pipe size reduction and orientation of tees shall be clearly indicated;

f) the location and size of the storage facility.

Information shall be submitted pertaining to the location and function of the detection devices, operating devices, auxiliary equipment and electrical circuitry, if used. Apparatus and devices shall be identified. Any special features shall be adequately explained. The version of the flow calculation program shall be identified on the computer calculation printout.

A.4 Completion certificate and documentation

The installer shall provide a certification package consisting of the following:

a) Commissioning checklist containing all of the information shown in Table A.1.

b) Certificate of completion containing all of the information shown in Table A.1.

c) Door fan test report in accordance with ISO 14520-1.

d) Discharge test report, if conducted which should include:

   1) date and time of test,

   2) name of installation, designer and contractor,

   3) enclosure identification,

   4) enclosure temperature prior to discharge,

   5) design concentration,

   6) position of sampling points,

   7) discharge time, and

   8) concentration levels at each sampling point at the beginning and at the end of the holding time.

e) System deficiencies.

f) Fire alarms certificate, if required.

© ISO 2022 – All rights reserved

Licensed to Unitek Safety Solution Joint Stock Company / cao linh (caolinhbk@gmail.com)
ISO Store Order: OP-772915 license #1/ Downloaded: 2024-04-14
Single user licence only, copying and networking prohibited.

Table A.1 — Commissioning checklist

Item	Task		Conformance	
			Yes/No/NA	Verified by
1	System Configuration			
2	Warning signs and notices			
3	Enclosure integrity			
4	Enclosure venting			
5	Containers			
	a) Location			
	b) Number size and marking			
	c) Charge quantity and dangerous goods label			
	d) Orientation			
	e) Mounting			
	f) Weighing devices			
6	Release mechanisms			
	a) Location			
	b) Number size and marking			
	c) Charge quantity and dangerous goods label			
	d) Orientation			
7	Manifolds and valves			
	a) Joints and fastenings			
	b) Flexible connectors			
	c) Discharge indicators			
	d) Pressure switches			
	e) Check valves			
	f) Directional valves			
	g) Pressure relief devices			
	h) Pressure reduction devices			
	i) Vent valves			
	j) Lock off valves			
8	Pipework			
	a)	i) Layout		
		ii) Size and fitting orientation		
		iii) Joints, nozzles and supports		
	b)	i) Pneumatic leak test		
		ii) Hydraulic pressure test		
		iii) Free passage		
9	Nozzles			
	a) Drilling, stamping and orientation			
	b) Discharge safety			
	c) Secure fastenings			
10	Electrical system			

© ISO 2022 – All rights reserved

Licensed to Unitek Safety Solution Joint Stock Company / cao linh (caolinhbk@gmail.com)
ISO Store Order: OP-772915 license #1/ Downloaded: 2024-04-14
Single user licence only, copying and networking prohibited.

Table A.1 *(continued)*

Item	Task	Conformance	
		Yes/No/NA	Verified by
11	Function tests		
	a) Local alarm		
	b) Alarm and signalling equipment		
	c) Plant shut downs		
12	Actuation system test		
	a) Audible discharge alarms		
	b) Visual warning devices		
	c) Door closures and ventilations dampers		
	d) Discharge time delay		
	e) Directional valves		
	f) Container release actuators		
13	Manual release devices		
14	Inhibit switch		
15	Lock-off valve		
16	Pneumatic equipment		
17	Discharge test		
18	Remarks		

© ISO 2022 – All rights reserved

Licensed to Unitek Safety Solution Joint Stock Company / cao linh (caolinhbk@gmail.com)
ISO Store Order: OP-772915 license #1/ Downloaded: 2024-04-14
Single user licence only, copying and networking prohibited.

CERTIFICATE OF COMPLETION

Part 1-4 TO BE COMPLETED BEFORE TESTING

This Certificate is issued by the Firm named in of the Schedule in respect of the Fixed Carbon dioxide Fire Extinguishing System provided for the person(s) or organisation named in Part 2 of the Schedule at the premises identified in Part 3 of the Schedule, being the Fixed Carbon dioxide Fire Extinguishing System of the type described in Part 4 of the Schedule

SCHEDULE	
Part 1	**Name of Issuing Firm**
Part 2	**Name of Customer**
Part 3	**Address of protected premises/Area**
Part 4	**4.1 Type of System**
	4.3 Type of Premises
	4.4 Is this a new system or an extension of an existing system?
	4.5 Has a list of Variations been presented?

© ISO 2022 – All rights reserved

Licensed to Unitek Safety Solution Joint Stock Company / cao linh (caolinhbk@gmail.com)
ISO Store Order: OP-772915 license #1/ Downloaded: 2024-04-14
Single user licence only, copying and networking prohibited.

Part 5				
Protected area	**Agent Quantity**	**Number of containers**	**Agent design concentration**	**Applicable Drawing (s)**

Remote system monitoring will be performed by	

Date of remote monitoring connection	

PART 6: TO BE COMPLETED BEFORE TESTING

Commissioning test(s) conducted by .....
..... Date.....

Commissioning test(s) witnessed by .....
..... Date .....

Door fan test(s) conducted by .....
..... Date..... .....

Door fan test(s) witnessed by .....
..... Date..... .....

Discharge test conducted by .....
..... Date..... .....

Discharge test witnessed by .....
..... Date..... .....

Remarks

We, being currently an XXXX 'Certificated Firm' in respect of the Fixed Carbon dioxide Fire Extinguishing System of the type(s) we have identified in Part 4 of the above Schedule, certify that the system in the above Schedule complies with the ISO 6183 identified in the above Schedule and with all other requirements as currently laid down within the Scheme in respect of such a system.

Date of Issue _____ (DD/MM/YYYY)

Signed for and on behalf of the issuing firm _____Job Title _____

© ISO 2022 – All rights reserved

Licensed to Unitek Safety Solution Joint Stock Company / cao linh (caolinhbk@gmail.com)
ISO Store Order: OP-772915 license #1/ Downloaded: 2024-04-14
Single user licence only, copying and networking prohibited.

Part 5				
Protected area	**Agent Quantity**	**Number of containers**	**Agent design concentration**	**Applicable Drawing (s)**

Remote system monitoring will be performed by	

Date of remote monitoring connection	

PART 6: TO BE COMPLETED BEFORE TESTING

Commissioning test(s) conducted by .....
..... Date.....

Commissioning test(s) witnessed by .....
..... Date .....

Door fan test(s) conducted by .....
..... Date..... .....

Door fan test(s) witnessed by .....
..... Date..... .....

Discharge test conducted by .....
..... Date..... .....

Discharge test witnessed by .....
..... Date..... .....

Remarks

We, being currently an XXXX 'Certificated Firm' in respect of the Fixed Carbon dioxide Fire Extinguishing System of the type(s) we have identified in Part 4 of the above Schedule, certify that the system in the above Schedule complies with the ISO 6183 identified in the above Schedule and with all other requirements as currently laid down within the Scheme in respect of such a system.

Date of Issue _____ (DD/MM/YYYY)

Signed for and on behalf of the issuing firm _____Job Title _____

Figure A.1 — Certification of Completion

© ISO 2022 – All rights reserved

Licensed to Unitek Safety Solution Joint Stock Company / cao linh (caolinhbk@gmail.com)
ISO Store Order: OP-772915 license #1/ Downloaded: 2024-04-14
Single user licence only, copying and networking prohibited.

Annex B
(normative)

Carbon dioxide system pipe and orifice size determination

B.1 Computer programs are generally used to perform calculations to determine pipework pressure and to calculate nozzle orifice sizes. The calculation program should be based on the parameters contained in this annex.

B.2 The storage pressure is an important factor in carbon dioxide flow. In low-pressure storage, the starting pressure in the storage vessel will drop by an amount depending on whether all or only part of the supply is discharged. Because of this, it will be about 1,97 MPa (19,7 bar). The flow equation is based on absolute pressure, therefore 2,07 MPa (20,7 bar) is used for calculations necessary for low-pressure systems.

In high-pressure systems, the storage pressure depends on ambient temperature. Normal ambient temperature is assumed to be 21 °C. At this temperature, the average pressure in the container during discharge of the liquid portion will be approximately 5,17 MPa (51,7 bar). This pressure has therefore been selected for calculations involving high-pressure systems.

Using the above pressures of 2,07 MPa (20,7 bar) and 5,17 MPa (51,7 bar), values have been determined for the Y and Z factors in the flow equation [Formula (B.1)]. These are listed in Tables B.1 and B.2.

B.3 For practical applications, it is desirable to plot curves for each pipe size that could be used. However, it is noted that the flow equation can be arranged as shown in Formula (B.1):

$$\frac{L}{D^{1,25}} = \frac{10^{-5} \times 0,872\ 5\ Y}{\left(\frac{Q}{D^2}\right)^2} - 0,043\ 19\ Z \tag{B.1}$$

where

D is the inside pipe diameter (actual), in mm;

L is the equivalent length of pipeline, in m;

Q is the flow rate, in kg/min.

Thus, by plotting the values $L/D^{1,25}$ and Q/D^2, it is possible to use one family of curves for any pipe size. Figure B.1 gives flow information for −18 °C storage temperature on this basis. Figure B.2 gives similar information for high-pressure at 21 °C.

These curves can be used for designing systems or for checking possible flow rates. Pressure conditions at any point in a pipeline can be obtained by calculating Q/D^2 and $L/D^{1,25}$ values. Points can then be plotted on the Q/D^2 curve to obtain starting and terminal pressures. For example, if the problem is to determine the terminal pressure for a low-pressure system consisting of a single 50 mm schedule 40 pipeline with an equivalent length of 152 m and a flow rate of 454 kg/min, the following calculations are used.

Q/D^2 and $L/D^{1,25}$ values are first calculated using Formula (B.2) and Formula (B.3):

$$\frac{Q}{D^2} = \frac{454}{2\,758} = 0,165\ \text{kg/min/mm}^2 \tag{B.2}$$

© ISO 2022 – All rights reserved

Licensed to Unitek Safety Solution Joint Stock Company / cao linh (caolinhbk@gmail.com)
ISO Store Order: OP-772915 license #1/ Downloaded: 2024-04-14
Single user licence only, copying and networking prohibited.

$$\frac{L}{D^{1,25}} = \frac{152}{141,3} = 1,075 \text{ m/mm}^{1,25} \tag{B.3}$$

Starting pressure is 2,07 MPa (20,7 bar) and $L/D^{1,25}$ = 0, shown in Figure B.1 and point S1. The terminal pressure is found to be approximately 1,57 MPa (15,7 bar) at point T1, where the Q/D^2 value of 0,165 intersects the $L/\ D^{1,25}$ value at 1,075.

If this line terminates in a single nozzle, the equivalent orifice area needs to be matched to the terminal pressure in order to control the flow rate at the desired level of 454 kg/min.

Table B.1 — Values of *Y* and *Z* for low-pressure systems

Pressure		*Y*	*Z*
MPa	**bar**		
2,07	20,7	0	0
2	20	665	0,12
1,9	19	1 500	0,295
1,8	18	2 201	0,470
1,7	17	2 790	0,645
1,6	16	3 285	0,820
1,5	15	3 696	0,994
1,4	14	4 045	1,169
1,3	13	4 338	1,344
1,2	12	4 584	1,519
1,1	11	4 789	1,693
1	10	4 962	1,868

Table B.2 — Values of *Y* and *Z* for high-pressure systems

Pressure		*Y*	*Z*
MPa	**bar**		
5,17	51,7	0	0
5,1	51	554	0,003 5
5,05	50,5	972	0,060 0
5	50	1 325	0,082 5
4,75	47,5	3 037	0,210
4,5	45	4 616	0,330
4,25	42,5	6 129	0,427
4	40	7 256	0,570
3,75	37,5	8 283	0,700
3,5	35	9 277	0,830
3,25	32,5	10 050	0,950
3	30	10 823	1,086
2,75	27,5	11 507	1,240
2,5	25	12 193	1,430
2,25	22,5	12 502	1,620
2	20	12 855	1,840
1,75	17,5	13 187	2,140
1,4	14	13 408	2,590

© ISO 2022 – All rights reserved

Licensed to Unitek Safety Solution Joint Stock Company / cao linh (caolinhbk@gmail.com)
ISO Store Order: OP-772915 license #1/ Downloaded: 2024-04-14
Single user licence only, copying and networking prohibited.

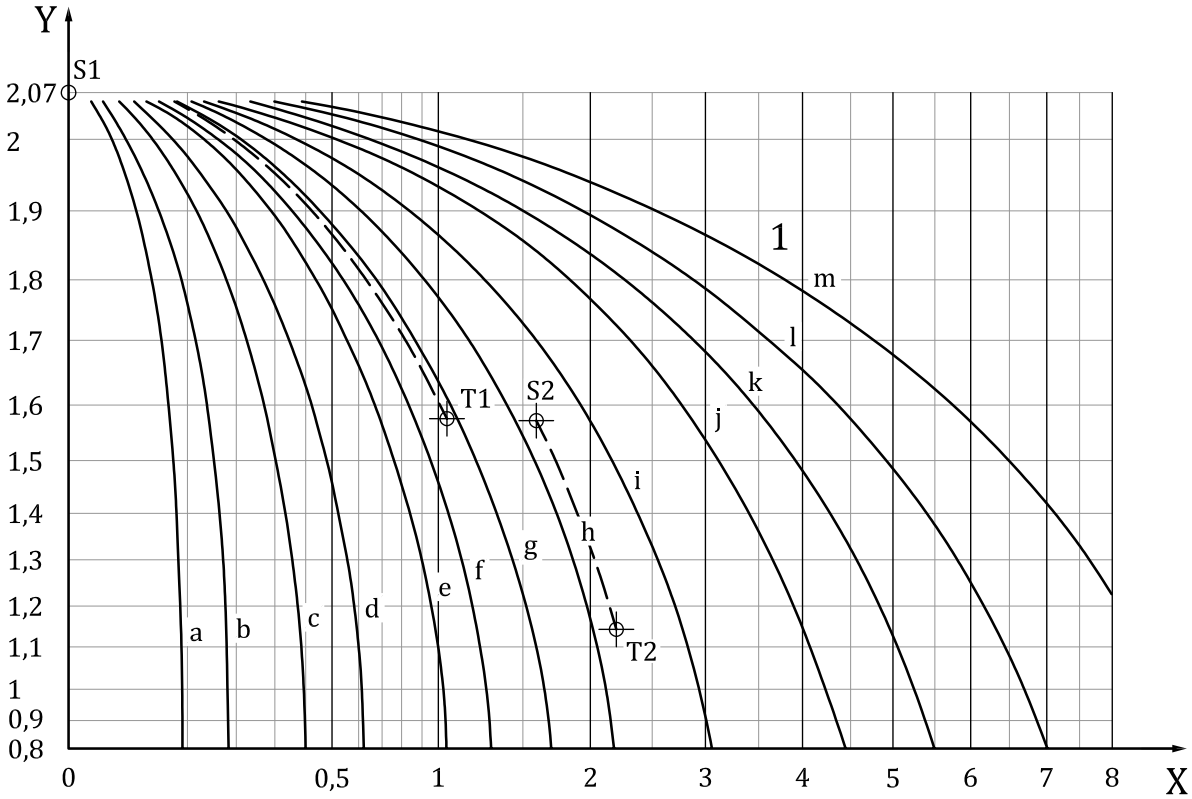

Key

X $L/D^{1,25}$ m/mm^{1,25}

Y pressure, MPa

S1 starting pressure

$\frac{Q}{D^2}$ /= 0,07 (kg/min)/mm^2

Figure B.1 — Pressure drop in pipeline for 2,07 MPa (20,7 bar) storage pressure

Referring to Table B.7, it is noted that the discharge rate will be 0,991 3 kg/min/mm^2 of equivalent orifice area when the orifice pressure is 1,59 MPa (15,9 bar). The required equivalent orifice area, A_{eo}, of the nozzle is thus equal to the total flow rate divided by the rate per square millimetre, calculated using Formula (B.4):

$$A_{eo} = \frac{454\ \text{kg/min}}{0{,}9913\ \text{kg/min/mm}^2} = 458\ \text{mm}^2 \tag{B.4}$$

From a practical viewpoint, the designer would select a standard nozzle having an equivalent area nearest to the computed area. If the orifice area happened to be a little larger, the actual flow rate would be slightly higher and the terminal pressures would be somewhat lower than the estimated 1,57 MPa (15,7 bar).

B.4 If, in the above example, instead of terminating with one large nozzle, the pipeline branches into two smaller pipelines, it will be necessary to determine the pressure at the end of each branch line.

© ISO 2022 – All rights reserved

Licensed to Unitek Safety Solution Joint Stock Company / cao linh (caolinhbk@gmail.com)
ISO Store Order: OP-772915 license #1/ Downloaded: 2024-04-14
Single user licence only, copying and networking prohibited.

To illustrate this procedure, assume that the branch lines are equal and consist of a 40 mm schedule 40 pipe with equivalent lengths of 61 m and the flow in each branch is 227 kg/min.

Q/D^2 and $L/D^{1,25}$ values are calculated for the branch pipe using Formulae (B.5) and (B.6):

$$\frac{Q}{D^2} = \frac{227}{1\,673} = 0{,}136\ \text{kg/min/mm}^2 \tag{B.5}$$

$$\frac{L}{D^{1,25}} = \frac{61}{103{,}4} = 0{,}59\ \text{m/mm}^{1,25} \tag{B.6}$$

From Figure B.1, the starting pressure of 1,57 MPa (15,7 bar) (terminal pressure of main line) intersects the Q/D^2 line 0,136 at point S2 giving an $L/D^{1,25}$ value of 1,6. The terminal pressure is found by moving down the Q/D^2 line a distance of 9,59 on the $L/D^{1,25}$ scale, i.e. $L/D^{1,25}$ = 1,60 + 0,59 = 2,19 to point T2 where the terminal pressure is 1,14 MPa (11,4 bar). With this new terminal pressure and flow rate 227 kg/min, the required nozzle area at the end of each branch line is obtained from Table B.7 and is approximately 368 mm^2.

It is noted that this is only slightly less than the single large nozzle example, but that the discharge rate is halved by the reduced pressure.

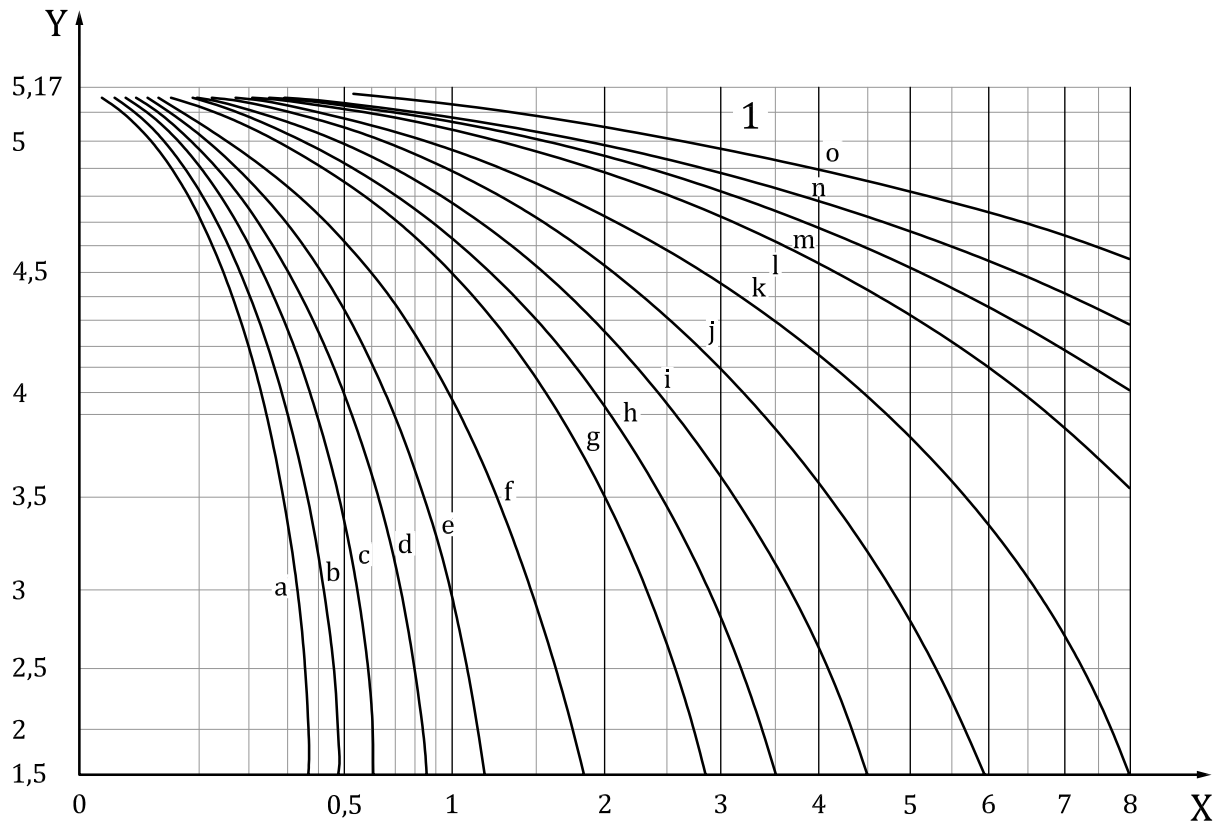

Key

X $L/D^{1,25}$ m/mm^{1,25}

Y pressure, MPa

Figure B.2 — Pressure drop in pipeline for 5,17 MPa (51,7 bar) storage pressure

B.5 In high-pressure systems, the manifold is supplied by a number of separate containers. The total flow is thus divided by the number of containers to obtain the flow rate from each container. The flow capacity of the container valve and the connector to the manifold will vary with each manufacturer depending on design and size. For any particular valve, dip tube and connector assembly, the equivalent

© ISO 2022 – All rights reserved

Licensed to Unitek Safety Solution Joint Stock Company / cao linh (caolinhbk@gmail.com)
ISO Store Order: OP-772915 license #1/ Downloaded: 2024-04-14
Single user licence only, copying and networking prohibited.

length can be determined in terms of unit length of standard pipe size. With this information, the flow equation can be used to prepare a curve of flow rate versus pressure drop. This provides a convenient method of determining manifold pressure for a specific valve and connector combination.

Tables B.3 and B.4 list the equivalent lengths of pipe fittings for determining the equivalent length of piping systems. Tables B.3 and B.4 are offered for guidance only. Manufacturers' listed data may also be used. Table B.3 is for threaded joints and Table B.4 for welded joints, and both have been prepared for schedule 40 pipe sizes. However, for all practical purposes, the same values can also be used for schedule 80 pipe sizes.

Table B.3 — Equivalent length of threaded pipe fittings

Pipe nominal size		Elbow std. 45°	Elbow std. 90°	Elbow 90° long radius and tee through flow	T-side	Union coupling or gate valve
in	mm	m	m	m	m	m
3/8	10	0,18	0,4	0,24	0,82	0,09
1/2	15	0,24	0,52	0,3	1	0,12
3/4	20	0,3	0,67	0,43	1,4	0,15
1	25	0,4	0,85	0,55	1,7	0,18
1 1/4	32	0,52	1,1	0,7	2,3	0,24
1 1/2	40	0,61	1,3	0,82	2,7	0,27
2	50	0,79	1,7	1,1	3,41	0,37
2 1/2	65	0,94	2	1,2	4,08	0,43
3	80	1,2	2,5	1,6	5,06	0,55
4	100	1,5	3,26	2	6,64	0,73
5	125	1,9	4,08	2,6	8,35	0,91
6	150	2,3	4,94	3,08	10	1,1

Table B.4 — Equivalent length of welded pipe fittings

Pipe nominal size		Elbow std. 45°	Elbow std. 90°	Elbow 90° long radius and tee through flow	T-side	Gate valve
in	mm	m	m	m	m	m
3/8	10	0,06	0,21	0,15	0,49	0,09
1/2	15	0,09	0,24	0,21	0,64	0,12
3/4	20	0,12	0,33	0,27	0,85	0,15
1	25	0,15	0,43	0,33	1,1	0,18
1 1/4	32	0,21	0,55	0,46	1,4	0,24
1 1/2	40	0,24	0,64	0,52	1,6	0,27
2	50	0,3	0,85	0,67	2,1	0,37
2 1/2	65	0,37	1	0,82	2,5	0,43
3	80	0,46	1,2	1	3,11	0,55
4	100	0,61	1,6	1,3	4,08	0,73
6	150	0,91	2,5	2	6,16	1,1

B.7 For nominal changes in elevation of piping, the change in head pressure is negligible. However, if there is a substantial change in elevation, this factor should be taken into account. The head pressure

© ISO 2022 – All rights reserved

Licensed to Unitek Safety Solution Joint Stock Company / cao linh (caolinhbk@gmail.com)
ISO Store Order: OP-772915 license #1/ Downloaded: 2024-04-14
Single user licence only, copying and networking prohibited.

correction per metre of elevation depends on the average line pressure where the elevation takes place, since the density changes with pressure.

Correction factors are given in Tables B.5 and B.6 for low-pressure and high-pressure systems, respectively. The correction is subtracted from the terminal pressure when the flow is upward and added to the terminal pressure when the flow is downward. The terminal pressure at the outlet having been determined, appropriately sized nozzles can now be selected.

Table B.5 — Elevation correction factors for low-pressure systems

Average line pressure		Elevation correction	
MPa	bar	MPa/m	bar/m
2,07	20,7	0,010	0,100
1,93	19,3	0,007 8	0,077 6
1,79	17,9	0,006 0	0,059 9
1,65	16,5	0,004 7	0,046 8
1,52	15,2	0,003 8	0,037 8
1,38	13,8	0,003 0	0,030 3
1,24	12,4	0,002 4	0,024 2
1,10	11,0	0,001 9	0,019 2
1,00	10,0	0,001 6	0,016 2

Table B.6 — Elevation correction factors for high-pressure systems

Average line pressure		Elevation correction	
MPa	bar	MPa/m	bar/m
5,17	51,7	0,008	0,079 6
4,83	48,3	0,006 8	0,067 9
4,48	44,8	0,005 8	0,057 7
4,14	41,4	0,004 9	0,048 6
3,99	39,9	0,004	0,04
3,45	34,5	0,003 4	0,033 9
3,1	31	0,002 8	0,028 3
2,76	27,6	0,002 4	0,023 8
2,41	24,1	0,001 9	0,019 2
2,07	20,7	0,001 6	0,015 8
1,72	17,2	0,001 2	0,012 4
1,4	14	0,001	0,010 2

For low-pressure systems, the discharge rate through equivalent orifices should be based on the values given in Table B.7. Design nozzle pressures should not be less than 1 MPa (10 bar).

For high-pressure systems, the discharge rate through equivalent orifices should be based on the values given in Table B.8. Design nozzle pressures stored at 21 °C should not be less than 1,4 MPa (14 bar).

Table B.7 — Discharge rate of equivalent orifice area[a] for low-pressure systems

Orifice pressure		Discharge rate
MPa	bar	kg/min/mm^2
2,07	20,7	2,967

[a] Based on a standard single orifice having a rounded entry with a coefficient of 0,98.

© ISO 2022 – All rights reserved

Licensed to Unitek Safety Solution Joint Stock Company / cao linh (caolinhbk@gmail.com)
ISO Store Order: OP-772915 license #1/ Downloaded: 2024-04-14
Single user licence only, copying and networking prohibited.

Table B.7 *(continued)*

Orifice pressure		Discharge rate
MPa	bar	kg/min/mm^2
2	20	2,039
1,93	19,3	1,67
1,86	18,6	1,441
1,79	17,9	1,283
1,72	17,2	1,164
1,65	16,5	1,072
1,59	15,9	0,991 3
1,52	15,2	0,917 5
1,45	14,5	0,850 7
1,38	13,8	0,791
1,31	13,1	0,736 8
1,24	12,4	0,686 9
1,17	11,7	0,641 2
1,1	11	0,599
1	10	0,54

[a] Based on a standard single orifice having a rounded entry with a coefficient of 0,98.

B.8 In high-pressure systems, the delay in achieving equilibrium flow will generally be insignificant. In low-pressure systems, the delay time and amount of carbon dioxide vaporized in cooling the pipe should be calculated and the equilibrium flow rate increased accordingly to deliver the desired quantity within the design time after the start of the discharge.

Delay time, t_d, (low-pressure systems), in seconds and mass, m_v, of carbon dioxide vaporized (low- or high-pressure systems), in kilograms, during this period may be calculated using Formula (B.7) and Formula (B.8):

$$t_d = \frac{mH_p(T_1 - T_2)}{0{,}507\,Q} + \frac{16\,850\,Vp}{Q} \tag{B.7}$$

$$m_v = \frac{mH_p(T_1 - T_2)}{H_1} \tag{B.8}$$

where

m is the mass of piping, in kg;

H_p is the specific heat of metal in pipe, in kilojoules per kilogram 0,46 kJ/kg for steel;

T_1 is the average pipe temperature before discharge, in °C;

T_2 is the average carbon dioxide temperature, in °C (15,6 °C for high pressure and −20,6 °C for low pressure);

Q is the flow rate, in kg/min;

V_P is the volume of piping, in m^3;

H_I is the latent heat of vaporization of liquid carbon dioxide, in kJ/kg (150,7 kJ/kg for high pressure and 276,3 kJ/kg for low pressure).

© ISO 2022 – All rights reserved

Licensed to Unitek Safety Solution Joint Stock Company / cao linh (caolinhbk@gmail.com)
ISO Store Order: OP-772915 license #1/ Downloaded: 2024-04-14
Single user licence only, copying and networking prohibited.

Table B.8 — Discharge rate of equivalent orifice area[a] for high-pressure systems

Orifice pressure		Discharge rate
MPa	bar	kg/min/mm^2
5,17	51,7	3,255
5	50	2,703
4,83	48,3	2,401
4,65	46,5	2,172
4,48	44,8	1,993
4,31	43,1	1,839
4,14	41,4	1,705
3,96	39,6	1,589
3,79	37,9	1,487
3,62	36,2	1,396
3,45	34,5	1,308
3,28	32,8	1,223
3,1	31	1,139
2,93	29,3	1,062
2,76	27,6	0,984 3
2,59	25,9	0,907
2,41	24,1	0,829 6
2,24	22,4	0,759 3
2,07	20,7	0,689
1,72	17,2	0,548 4
1,4	14	0,483 3

[a] Based on a standard single orifice having a rounded entry with a coefficient of 0,98.

© ISO 2022 – All rights reserved

Licensed to Unitek Safety Solution Joint Stock Company / cao linh (caolinhbk@gmail.com)
ISO Store Order: OP-772915 license #1/ Downloaded: 2024-04-14
Single user licence only, copying and networking prohibited.

Annex C
(informative)

System performance verification

A suitable procedure for verification of the system is as follows:

a) **Every 3 months**

Test and service all electrical detection and alarm systems.

b) **Every 6 months**

Perform the following checks and inspections.

1) Externally examine pipework to determine its condition. Replace or pressure test and repair as necessary pipework showing corrosion or mechanical damage.

2) Check all control valves for correct manual functioning and automatic valves additionally for correct automatic functioning.

3) Externally examine containers for signs of damage or unauthorized modification, and for damage to system hoses.

4) Check weight or use a liquid level indicator to verify correct content of containers. Replace or refill any container showing a mass loss of more than 10 %.

c) **Every 12 months**

Carry out a check of enclosure integrity using the method specified in 8.2.10. If the measured aggregate area of leakage has increased from that measured during installation to the extent that it could adversely affect system performance, carry out work to reduce the leakage.

d) As required by statutory regulations, but otherwise when convenient, remove the containers and pressure test when necessary.

© ISO 2022 – All rights reserved

Licensed to Unitek Safety Solution Joint Stock Company / cao linh (caolinhbk@gmail.com)
ISO Store Order: OP-772915 license #1/ Downloaded: 2024-04-14
Single user licence only, copying and networking prohibited.

Annex D
(informative)

General information on carbon dioxide

D.1 General

Carbon dioxide is a colourless, odourless and electrically non-conductive inert gas. Carbon dioxide is approximately one and one-half times as heavy as air. 1 kg of liquid carbon dioxide relieved to atmospheric pressure at 0 °C produces approximately 0,51 m^3 of gas. Carbon dioxide is stored in pressure vessels normally as liquefied gas.

Carbon dioxide extinguishes fire principally by reducing the oxygen content in the atmosphere to a point where it will not support combustion.

Carbon dioxide is a standard commercial product with many uses. It is perhaps most familiar as the gas that gives the "fizz" in carbonated soft drinks. In industrial applications, it is used for its chemical properties, its mechanical properties as a pressurizing agent, or its refrigerating properties as dry ice.

For fire-extinguishing applications, carbon dioxide has a number of desirable properties. It is noncorrosive, nondamaging, and leaves no residue to clean up after the fire. It provides its own pressure for discharge through pipes and nozzles. Because it is a gas, it will penetrate and spread to all parts of a hazard. It will not conduct electricity and can therefore be used on live electrical hazards. It can effectively be used on practically all combustible materials except for a few active metals and metal hydrides and materials, such as cellulose nitrate, that contain available oxygen.

An unusual property of carbon dioxide is the fact that it cannot exist as a liquid at pressures below 60,4 psi [517 kPa (75 psi) absolute]. This is the triple point pressure where carbon dioxide could be present as a solid, a liquid, or a vapour. Below this pressure, it is either a solid or a gas, depending on the temperature.

If the pressure in a storage container is reduced by bleeding off vapour, some of the liquid will vaporize and the remaining liquid will become colder. At 60,4 psi [517 kPa (75 psi) absolute], the remaining liquid will be converted to dry ice at a temperature of −57 °C. Further reduction in the pressure to atmospheric will lower the temperature of the dry ice to the normal −79 °C. Carbon dioxide is easily liquefied by compression and cooling. By further cooling and expansion, it can be converted to a solid state.

The same process takes place when liquid carbon dioxide is discharged into the atmosphere. A large portion of the liquid flashes to vapour with a considerable increase in volume. The rest is converted to finely divided particles of dry ice at −79 °C. It is this dry ice, or "snow", that gives the discharge its typical white cloudy appearance. The low temperature also causes the condensation of water from the entrained air so that ordinary water fog tends to persist for a while after the dry ice has sublimed.

The relationship between the temperature and the pressure of liquid carbon dioxide is shown in Figure D.1. As the temperature of the liquid increases, the pressure also increases. As the pressure increases, the density of the vapour over the liquid increases. On the other hand, the liquid expands as the temperature goes up and its density decreases. At 31 °C, the liquid and the vapour have the same density, and of course the liquid phase disappears. This is called the *critical temperature* for carbon dioxide. Below the critical temperature, carbon dioxide in a closed container is part liquid and part gas. Above the critical temperature, it is entirely gas.

© ISO 2022 – All rights reserved

Licensed to Unitek Safety Solution Joint Stock Company / cao linh (caolinhbk@gmail.com)
ISO Store Order: OP-772915 license #1/ Downloaded: 2024-04-14
Single user licence only, copying and networking prohibited.

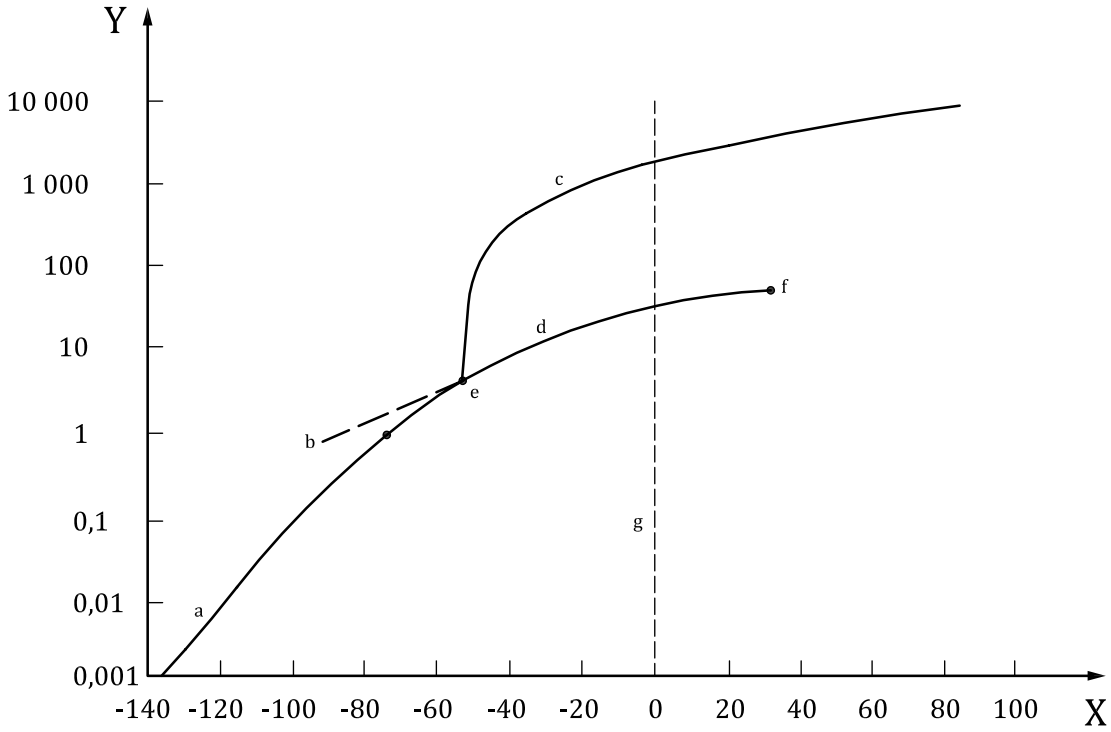

Key

X temperature, °C

Y pressure, atm

a CO_2 solid + gas.

b Supercritical: 78,5 °C.

c CO_2 solid + liquid.

d CO_2 liquid + gas.

e Triple point: – 56,6 °C; 5,11 atm.

f Critical point.

g CO_2 gas.

Figure D.1 — Variation of pressure of carbon dioxide with change in temperature (constant volume)

D.2 Free efflux

The volume of carbon dioxide needed to develop a given concentration will be greater than the final volume remaining in the enclosure. The method of application is called "free-efflux" flooding and is expressed by Formula (D.1):

$$X = 2{,}303 \log_{10}\left(\frac{100}{100 - \%\,CO_2}\right) \tag{D.1}$$

where X is the volume of carbon dioxide added per volume of space.

Calculated and plotted for easy reference, one curve is shown in Figure D.2. On this curve it was assumed the carbon dioxide would expand to a volume of 0,56 m^3/kg at a temperature of 30 °C.

The data in this annex is based on this assumption. It should be noted that in some well-insulated enclosures, complete and rapid vaporization of the carbon dioxide discharge might not occur.

© ISO 2022 – All rights reserved

Licensed to Unitek Safety Solution Joint Stock Company / cao linh (caolinhbk@gmail.com)
ISO Store Order: OP-772915 license #1/ Downloaded: 2024-04-14
Single user licence only, copying and networking prohibited.

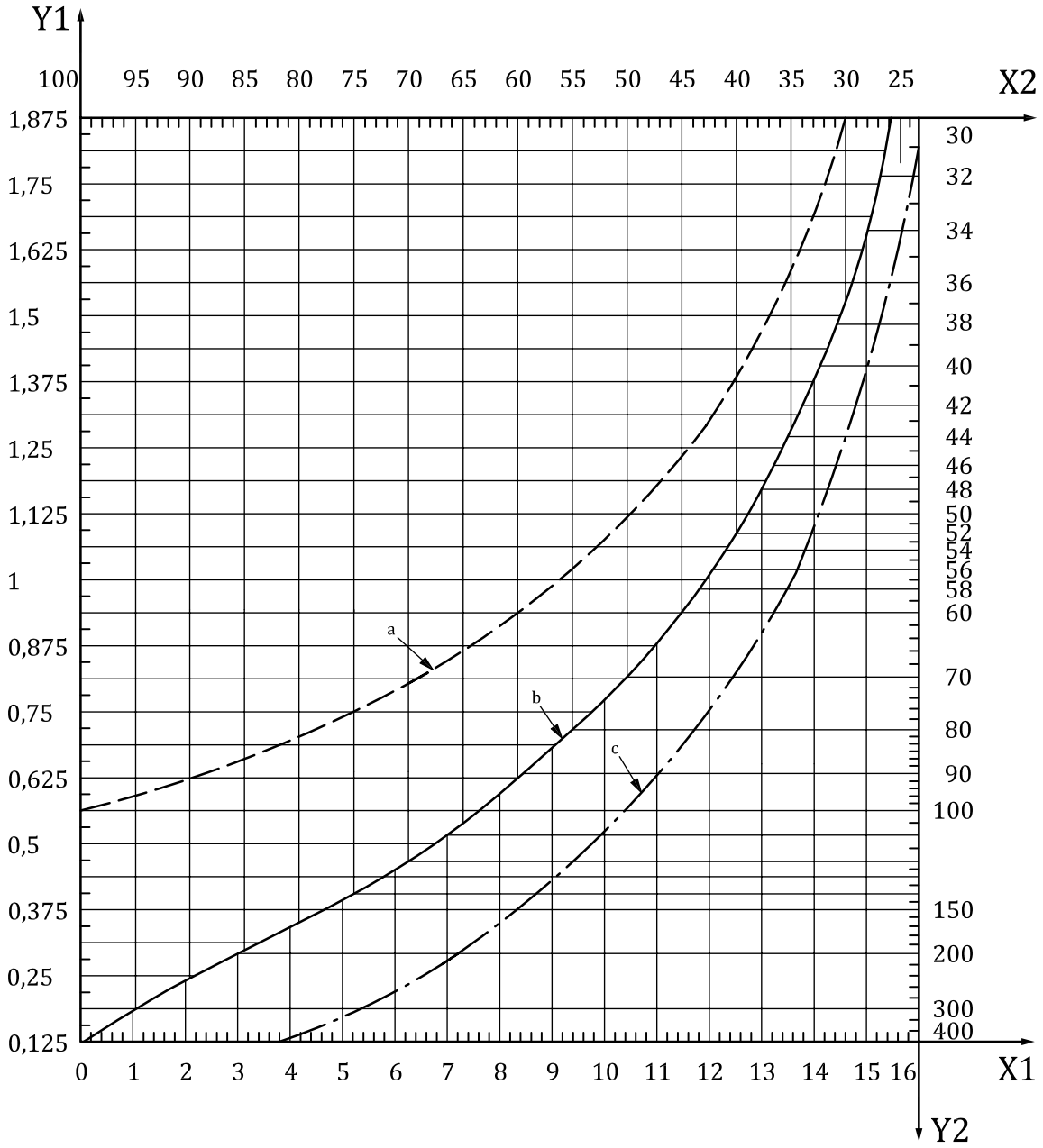

Key

X1 oxygen remaining, %

Y2 injection factor, space $m^3/CO_2/kg$

X2 CO_2 received, %

Y2 CO_2 injected, %

a Complete displacement.

b Free efflux.

c No efflux.

NOTE The top curve (complete displacement) and the bottom curve (no efflux) are theoretical extremes plotted for comparative purposes only. The middle curve (free efflux), the curve to be used, needs to be tempered by proper safety factors.

Figure D.2 — Carbon dioxide requirements for inert atmosphere, based on a carbon dioxide expansion of 0,56 m^3/kg

© ISO 2022 – All rights reserved

Licensed to Unitek Safety Solution Joint Stock Company / cao linh (caolinhbk@gmail.com)
ISO Store Order: OP-772915 license #1/ Downloaded: 2024-04-14
Single user licence only, copying and networking prohibited.

D.3 Hazards to personnel

Potential hazards to be considered for individual systems are the following:

a) **The agent itself**

Carbon dioxide is present in the atmosphere at an average concentration of about 0,03 % by volume and is a normal end-product of human and animal metabolism. Carbon dioxide influences certain vital functions in a number of important ways, including control of respiration, dilation and constriction of the vascular system, particularly the cerebrum, and the pH of body fluids. The concentration of carbon dioxide in the air governs the rate at which carbon dioxide is released from the lungs and thus affects the concentration of carbon dioxide in the blood and tissues. An increasing concentration of carbon dioxide in the air can, therefore, become dangerous, due to a reduction in the rate of release of carbon dioxide from the lungs and decreased oxygen intake. Persons rendered unconscious by carbon dioxide can be restored to consciousness without permanent injury by artificial respiration, if removed quickly from the protected area.

CAUTION — The discharge of carbon dioxide to extinguish a fire creates a hazard to personnel. Exposure of personnel to discharge of carbon dioxide should be avoided.

For personnel safety considerations, see Clause 5.

Table D.1 provides information on acute health effects of high concentrations of carbon dioxide.

Table D.1 — Acute health effects of high concentrations of carbon dioxide (with increasing exposure levels of carbon dioxide)

Concentration of carbon dioxide %	Time	Effects
2	Several hours	Headache, dyspnoea upon mild exertion
3	1 h	Dilation of cerebral blood vessels, increased pulmonary ventilation, and increased oxygen delivery to the tissues
4–5	Within a few min.	Mild headache, sweating, and dyspnoea at rest
6	Within a few min. Less than 16 min. Several hours	Hearing and visual disturbances Headache and dyspnoea Tremors
7–10	Within a few min. 1,5 min to 1 h	Unconsciousness or near-unconsciousness Headache, increased heart rate, shortness of breath, dizziness, sweating, and rapid breathing
10–15	1 min. or more	Dizziness, drowsiness, severe muscle twitching, and unconsciousness
17–30	Less than 1 min.	Loss on controlled and purposeful activity, unconsciousness, convulsions, coma and death

b) **Noise**

Discharge of a system can cause noise loud enough to be startling but ordinarily insufficient to cause traumatic injury.

c) **Turbulence**

High-velocity discharge from nozzles could be sufficient to dislodge substantial objects directly in their path. System discharge can cause enough general turbulence in the enclosures to move unsecured paper and light objects.

© ISO 2022 – All rights reserved

Licensed to Unitek Safety Solution Joint Stock Company / cao linh (caolinhbk@gmail.com)
ISO Store Order: OP-772915 license #1/ Downloaded: 2024-04-14
Single user licence only, copying and networking prohibited.

d) **Cold temperature**

Direct contact with liquefied carbon dioxide being discharged from a system will have a strong chilling effect on objects and can cause frostbite burns to the skin. The liquid phase vaporizes rapidly when mixed with air and thus limits the hazard to the immediate vicinity of the discharge point. In humid atmospheres, minor reduction in visibility can occur for a brief period due to the condensation of water vapour.

© ISO 2022 – All rights reserved

Licensed to Unitek Safety Solution Joint Stock Company / cao linh (caolinhbk@gmail.com)
ISO Store Order: OP-772915 license #1/ Downloaded: 2024-04-14
Single user licence only, copying and networking prohibited.

Annex E
(informative)

Examples of calculations

E.1 Rate by volume method — Example 1

E.1.1 Hazard

Paint spray booth (requirements for plenum and duct would be a separate calculation; K_B = 1). See Figure E.1

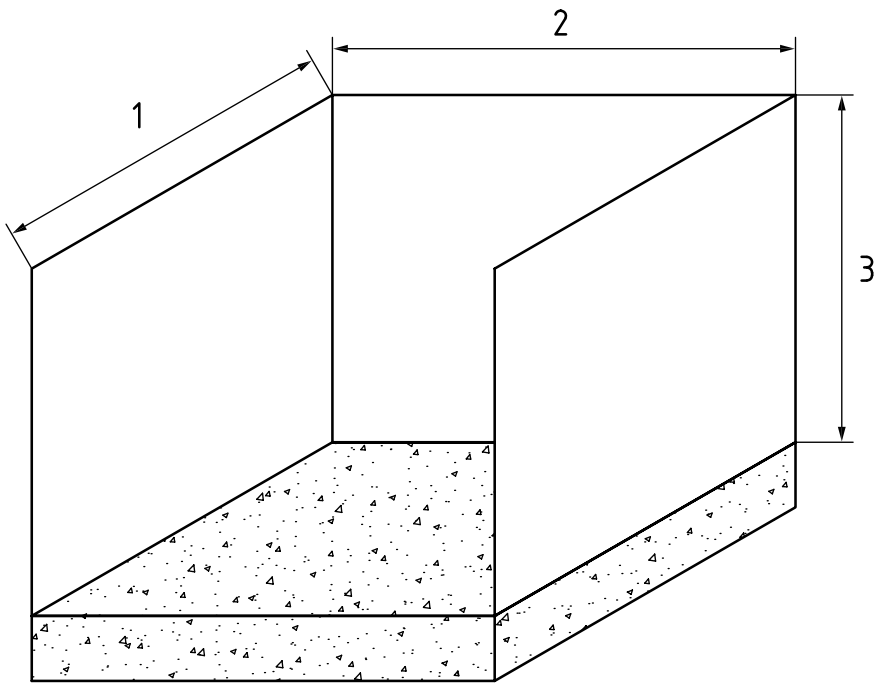

Key

1 depth
2 width
3 height

Figure E.1 — Example paint spray booth, open front, one open side and open top

E.1.2 Actual dimensions

Width = 2,44 m (open front)

Height = 2,13 m

Depth = 1,83 m

E.1.3 Assumed volume

$$2{,}44\,\text{m} \times 2{,}13\,\text{m}\,(1{,}83\,\text{m depth} + 0{,}6\,\text{m}) = 12{,}63\,\text{m}^3$$

© ISO 2022 – All rights reserved

Licensed to Unitek Safety Solution Joint Stock Company / cao linh (caolinhbk@gmail.com)
ISO Store Order: OP-772915 license #1/ Downloaded: 2024-04-14
Single user licence only, copying and networking prohibited.

E.1.4 Percent perimeter enclosed

$$\frac{2,44+1,83+1,83}{2,44+2,44+1,83+1,83}=\frac{6,1}{8,54}\times 100\approx 71\,\%$$

E.1.5 Discharge rate for 71 % enclosure

4 + [(1 − 0,71) × (16 − 4)] = 7,48 kg/min/m^3

E.1.6 Discharge rate

12,63(m^3) × 7,48 (kg/min/m^3) = 94,47 kg/min

E.1.7 Carbon dioxide requirement

94,47 (kg/min) × 0,5 (min) × 1,4 (includes vapour) = 66,13 kg

E.2 Rate by volume method — Example 2

E.2.1 Hazard

Printer with four sides and top open (no continuous solid walls; K_B = 1). See Figure E.2.

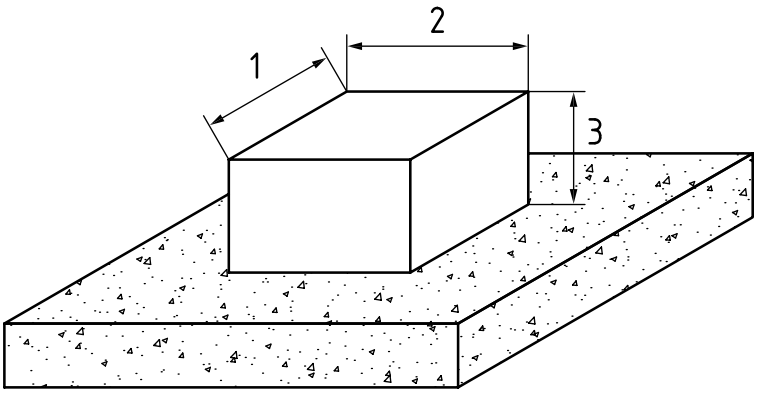

Key

1 depth
2 width
3 height

Figure E.2 — Example printer within a large enclosure

E.2.2 Actual dimensions

Width = 1,22 m

Length = 1,52 m

Height = 1,22 m

E.2.3 Assumed volume

2,42 m × 2,72 m × 1,82 m = 11,98 m^3

© ISO 2022 – All rights reserved

Licensed to Unitek Safety Solution Joint Stock Company / cao linh (caolinhbk@gmail.com)
ISO Store Order: OP-772915 license #1/ Downloaded: 2024-04-14
Single user licence only, copying and networking prohibited.

E.2.4 Percent perimeter enclosed

0 %

E.2.5 Discharge rate for 0 % enclosure

16 kg/min/m^3

E.2.6 Discharge rate

11,98 (m^3) × 16 (kg/min/m^3) = 191,7 kg/min

E.2.7 Carbon dioxide requirement

191,7 (kg/min) × 0,5 (min) × 1,4 (includes vapour) = 134,2 kg

E.3 Rate by area method

E.3.1 Hazard

Quench tank (K_B = 1).

E.3.2 Surface dimensions

Width = 9,92 m

Length = 2,13 m

E.3.3 Nozzle location

Assume that a survey indicates that nozzles can be positioned anywhere from 0,92 m to 1,82 m away from the liquid surface without interfering with the operation.

E.3.4 Procedure

From the manufacturer's list of approved nozzles, select the minimum number of nozzles that will cover an area of 2,13 m × 0,92 m. Assume that the list has a nozzle which has a rated coverage of 1,08 m^2 at a height of 1,52 m and a rated flow of 22,3 kg/min. Two nozzles will then cover a length of 2,16 m and a width of 1,08 m.

NOTE The manufacturer's list of approved nozzles will list a series of rated nozzles with their respective area coverage at a given height above the surface to be protected and a given flow rate in kg/min.

E.3.5 Total flow rate

2 × 22,3 (kg/min) = 44,6 kg/min

E.3.6 Carbon dioxide requirement

44,6 (kg/min) × 0,5 (min) × 1,4 (includes vapour) = 31,2 kg

E.4 Total flooding system

E.4.1 Storeroom

Storeroom for ethyl alcohol (K_B = 1,34) with an opening (not to be shut) of 2 m × 1 m.

© ISO 2022 – All rights reserved

Licensed to Unitek Safety Solution Joint Stock Company / cao linh (caolinhbk@gmail.com)
ISO Store Order: OP-772915 license #1/ Downloaded: 2024-04-14
Single user licence only, copying and networking prohibited.

E.4.2 Actual dimensions

Length = 16 m

Width = 10 m

Height = 3,5 m

E.4.3 Assumed volume

Where,

$A = A_V + 30\,A_{OV}$

A_V is the total surface area of all sides, and of the floor and ceiling (including the openings, A_{OV}) of the enclosure to be protected, in m^2;

A_{OV} is the total surface area of all openings which can be assumed will be open in the event of a fire, in m^2 (see 7.4.3.2);

$V = V_V + V_Z - V_G$

V_V is the volume of the enclosure to be protected, in m^3;

V_Z is the additional volume removed during the hold time (see Table 5) by ventilation systems which cannot be shut down, in cubic metres (see 7.4.3.1);

V_G is the volume of the building structure which can be deducted, in m^3.

$V_v = 16 \times 10 \times 3{,}5 = 560\ m^3$

E.4.4 Additional volume for ventilation

$V_Z = 0\ m^3$

E.4.5 Deductible volume

$V_G = 0\ m^3$

$V = 560 - 0 - 0\ m^3$

E.4.6 Total surface area of all sides

$A_v = (16 \times 10 \times 2) + (16 \times 3{,}4 \times 2) + (10 \times 3{,}5 \times 2) = 502\ m^2$

E.4.7 Total surface area of all openings

$A_{ov} = 2 \times 1 = 2\ m^2$

E.4.8 Area

$A = 502 + 60 = 562\ m^2$

© ISO 2022 – All rights reserved

Licensed to Unitek Safety Solution Joint Stock Company / cao linh (caolinhbk@gmail.com)
ISO Store Order: OP-772915 license #1/ Downloaded: 2024-04-14
Single user licence only, copying and networking prohibited.

E.4.9 Carbon dioxide design quantity

$$m = 1{,}34 \times (0{,}2\,\mathrm{kg}/\mathrm{m}^2 \times 562\,\mathrm{m}^2 + 0{,}7\,\mathrm{kg}/\mathrm{m}^3 \times 560\,\mathrm{m}^3) = 675{,}9\,\mathrm{kg}$$

© ISO 2022 – All rights reserved

Licensed to Unitek Safety Solution Joint Stock Company / cao linh (caolinhbk@gmail.com)
ISO Store Order: OP-772915 license #1/ Downloaded: 2024-04-14
Single user licence only, copying and networking prohibited.

Bibliography

[1] ISO 21805:—[6], *Guidance on design, selection and installation of vents to safeguard the structural integrity of enclosures protected by gaseous fire-extinguishing systems*

[2] *Limits of Flammability of Gases and Vapours, Bulletins 503 and 627.*

[3] EN 12094 (all parts), *Fixed firefighting systems. Components for gas extinguishing systems*

6) Under preparation. Stage at the time of publication: ISO/FDIS 21805:2022.

© ISO 2022 – All rights reserved

Licensed to Unitek Safety Solution Joint Stock Company / cao linh (caolinhbk@gmail.com)
ISO Store Order: OP-772915 license #1/ Downloaded: 2024-04-14
Single user licence only, copying and networking prohibited.

Licensed to Unitek Safety Solution Joint Stock Company / cao linh (caolinhbk@gmail.com)
ISO Store Order: OP-772915 license #1/ Downloaded: 2024-04-14
Single user licence only, copying and networking prohibited.

ICS 13.220.10

Price based on 68 pages

© ISO 2022 – All rights reserved